SENZ®
GERMANY
COOKING IN STYLE

THE MALAYSIA BOOK of RECORDS®

*HIGHEST NUMBER OF WHOLESALE INTELCLEAN COOKER HOOD SALES VALUE IN A YEAR.

Products Updated JANUARY 2025

THE NO 1 CHOICE

for the New Generation

Message from the Managing Director

At **SENZ**, we offer luxury kitchen appliances at affordable prices, tailored for Malaysian kitchens. Our products, categorized into **Premium X**, **Premium**, and **Classic collections**, combine quality with options for every budget.

As Malaysia's top-rated kitchen appliance brand with 5-star Google reviews, we pride ourselves on exceptional customer service and in-house technical support, ensuring your satisfaction and peace of mind.

At **SENZ**, we deliver more than just products—we create exceptional experiences.

Warm regards,

Katherine Leong

Datin Katherine Leong
Managing Director, SENZ Marketing (M) Sdn Bhd

About SENZ – Cooking in Style

NOVEMBER, 2009

We came into existence in November, 2009. We started off by selling electric stoves to end users via exhibitions, roadshows, and our very own showrooms. Now, we are known as the pioneer of functional yet stylish kitchen appliances such as electric stoves, electric cookers, cooker hoods, built-in electric ovens, and built-in gas stoves.

Address:

No.23, Jln TPP 3, Taman Perindustrian Putra, 47130 Puchong, Selangor

JANUARY, 2021

We recognized in The Malaysia Book of Records for the highest wholesale of Intelclean Cooker Hoods, we proudly collaborate with over 200 dealers nationwide, solidifying our position as a trusted leader in the kitchen appliance industry.

Our Vision

To become the No.1 Kitchen Appliances Brand in Malaysia, with at least 1 in every 10 households choosing our products

Our Mission

Through constant research and innovation, design and develop kitchen appliances that are truly for Malaysian cooking experience

Our Brand Promise

- Luxury yet Affordable
- Provide WOW user experience
- Expertise & Professional

The Malaysia Book of Records

for the Highest wholesale of Intelclean Cooker Hoods

National Record

VERIFIED ENTRY
MALAYSIA BOOK OF RECORDS

This Is To Certify That

SENZ MARKETING (M) SDN BHD

Is Listed In

THE MALAYSIA BOOK OF RECORDS

for having the

HIGHEST NUMBER OF WHOLESALE INTELCLEAN COOKER HOOD SALES VALUE IN A YEAR

Date : January 6, 2021

Venue : Nexus Bangsar South, Kuala Lumpur

CSR Program – Sponsor of the Appliances Initiative

At SENZ, we believe in giving back to society and nurturing future generations. With great pride, we announce our contribution of premium kitchen appliances to schools in need through our CSR initiative — empowering young chefs to shape a brighter tomorrow.

SMK ALAM MEGAH

SMK PUCHONG PERDANA

SJK (C) TAMAN CONNAUGHT

SMK KAJANG UTAMA

PREMIUM X
Collection

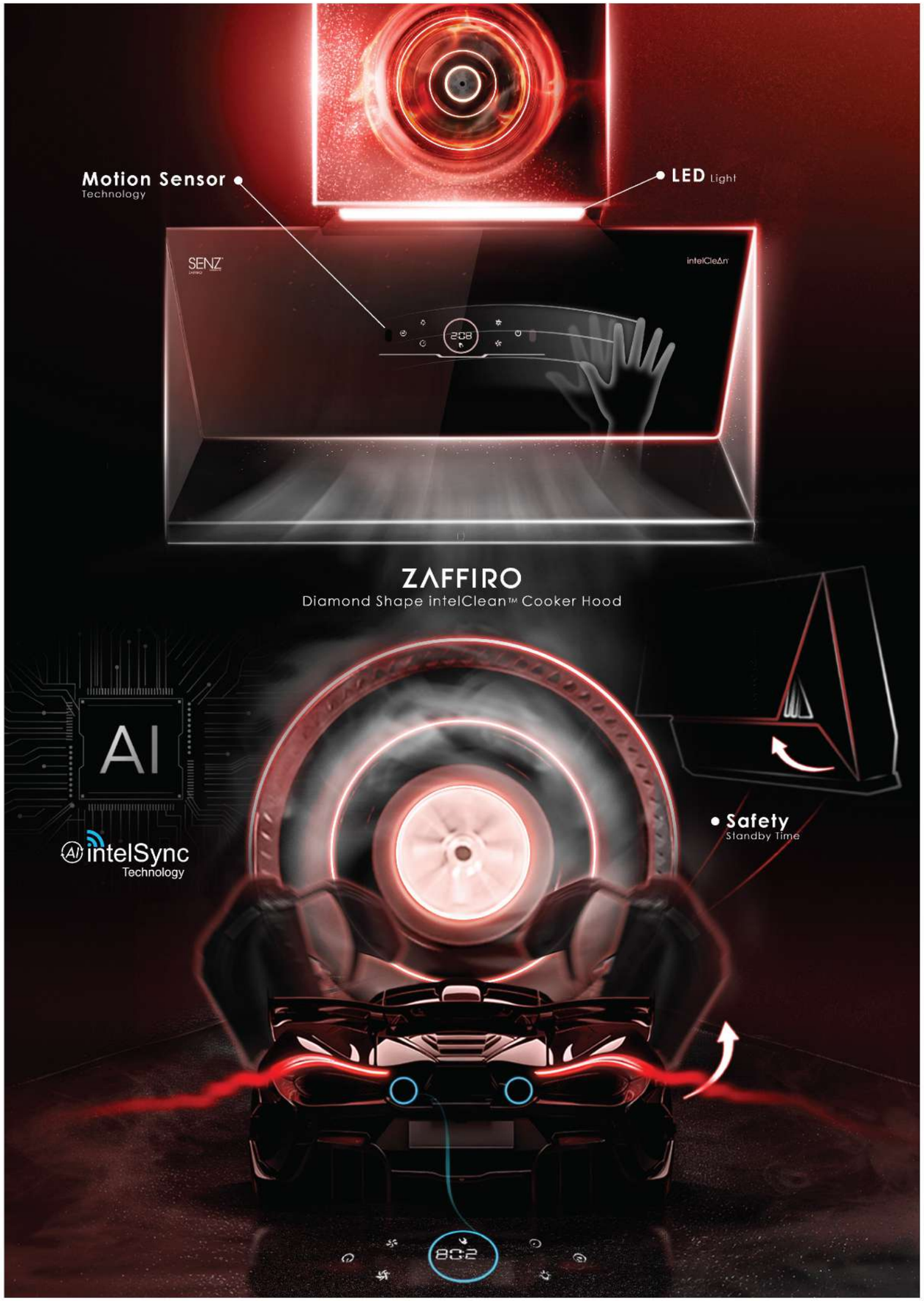

PREMIUM X NEW **ZAFFIRO DC** Diamond Shape intelClean™ Cooker Hood **Retail Price: EM: RM4,099 WM: RM3,899**

Model No:SZ-CH9980DC

Highlights:

- BLDC motor consumes less electricity with up to 1900pa
- Noise level as low as 45 db
- AI Grease Smart function – able to detect the level of grease and adjust its suction power accordingly
- Suction power: 2000 m3/h (with turbo boost)
- Heat Auto Cleaning Function
- Motion Sensor Technology
- Metal oil cup which is 5 times bigger than traditional size
- LED light
- Recommended installation height from electric hob: 300mm ~ 450mm
- Recommended installation height from gas hob: 400mm ~ 500mm
- 2 pcs Metal Chimney Cover
- Stainless steel wall cap
- 3 meters aluminum hose (hose dimension: 180mm (7"))
- Coring dimension at wall for installing wall cap: 150mm (6")
- Included: a connector will be provided to connect 180mm to 150mm for easy installation

Optional Accessories:

- Charcoal filter

Plug Used:

13amp

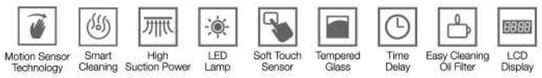

Installation fees is NOT included for all the price stated above & price is subject to change without prior notice

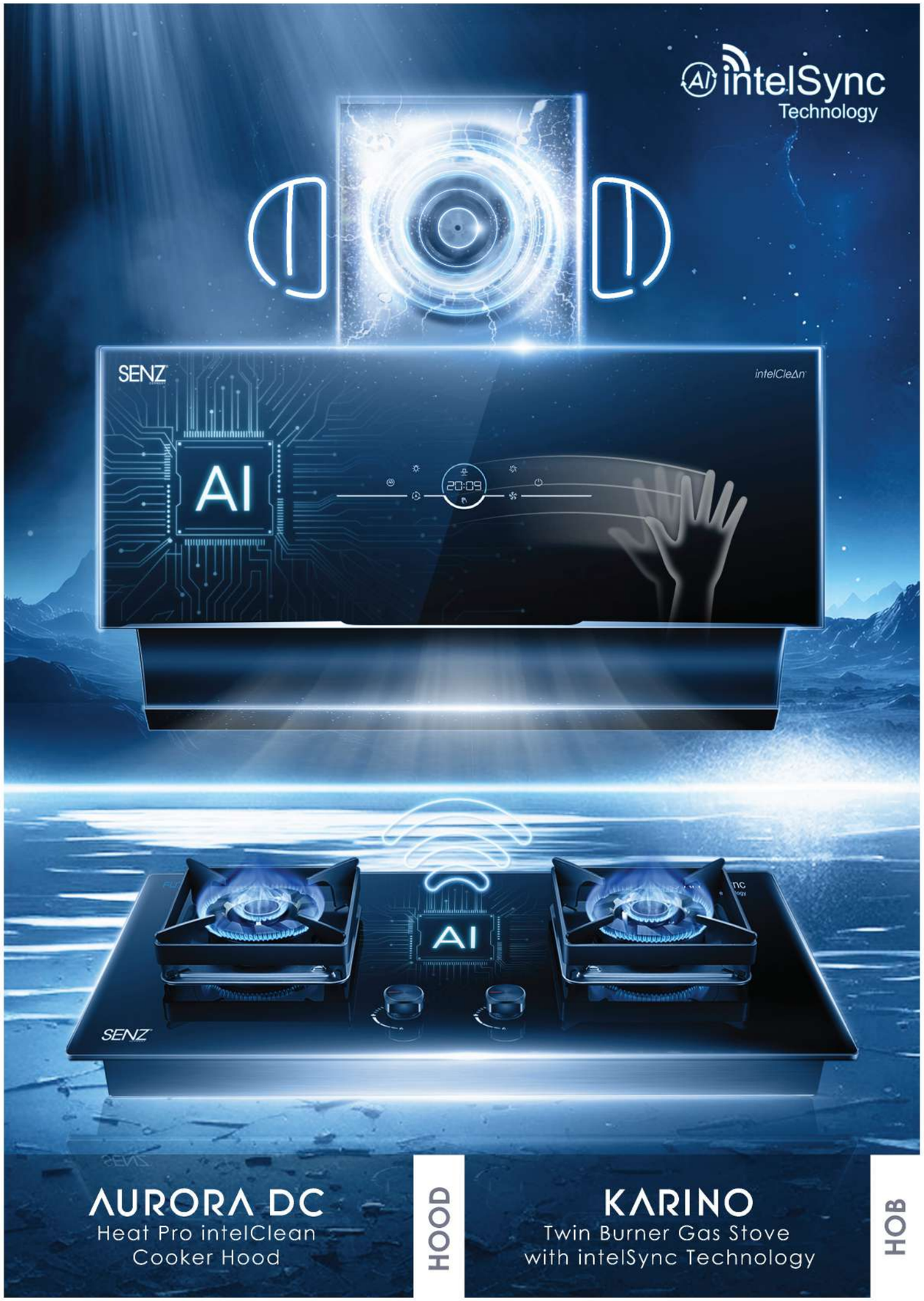

PREMIUM X NEW **AURORA DC** Heat Pro intelClean Cooker Hood — **Retail Price: EM: RM3,949 WM: RM3,749**

Model No:SZ-CH9050AC(Auto Cleaning)

Highlights:

- BLDC motor consumes less electricity with up to 1900pa
- Noise level as low as 45 db
- AI Grease Smart function – able to detect the level of grease and adjust its suction power accordingly
- Suction Power: 1950 m3/h (with turbo boost)
- Heat auto cleaning function
- Motion Sensor Technology
- Metal oil cup which is 5 times bigger than traditional size
- LED light
- Recommended installation height from gas hob: 400mm ~ 500mm
- Recommended installation height from electric hob: 300mm ~ 450mm
- 2 pcs Metal Chimney Cover
- Stainless steel wall cap
- 3 meters aluminum hose (hose dimension: 180mm (7"))
- Coring dimension at wall for installing wall cap: 150mm (6")
- Included: a connector will be provided to connect 180mm to 150mm for easy installation

Optional Accessories:

- Charcoal filter

Plug Used:

13amp

PREMIUM X NEW **KARINO** Twin Burner Gas Stove with intelSync Technology — **Retail Price: EM: RM2,199 WM: RM1,999**

Model No:SZ-GS3898

Exclusive SENZ Logo on Burner Cap

Futex Glass Heat Resistance Tempered Glass

AI IntelSync Technology

Highlights:

- Equip with latest intelSync Technology (This function ONLY available when you pair with Aurora DC / Zaffiro DC Cooker Hood)
- Functions as below:
  - Smart AI ON / OFF function: Hood will switch ON / OFF automatically when you turn on your Karino Gas Stove
  - Smart AI Speed Adjustment:
  - Hood will switch to its highest speed when you switch to biggest flame
  - Hood will switch to its lowest speed when you switch on to lower flame
- Has up to 5.4kW heat intensity

- 0 seconds ignition technology
- Build-in Flame Failure Device (Auto gas cut-off within 10 seconds)
- Heat Resistance Tempered Glass FUTEX
- Battery operated auto-ignition
- Removable burner cap
- Easy to clean
- Safety valve
- Gas Type: LPG
- Gas Pressure: 2800 kPA
- Glass Size: 760mm x 440mm
- Free Standing or Built-in
- Built-in Hole Dimension : 650mm(W) x 350mm(L)

CAUTION : Please ensure that the burner cap is placed securely and evenly to prevent any gas leaks and potential fire hazards.

Installation fees is NOT included for all the price stated above & price is subject to change without prior notice

PREMIUMX **ESTILLA** GreaseGuard Heat Pro intelClean Cooker Hood **Retail Price: EM: RM3,949 WM: RM3,749**

Model No:SZ-CH9090AC

Highlights:

- Innovative TripleGuard Filters effectively filter up to 99%* of grease, ensuring a fresh and pristine cooking environment
- Sleek and modern design that seamlessly integrates into any kitchen decor
- Suction power: 1950 m3/h (with turbo boost)
- Motion sensor technology
- 4 speeds power
- Heat auto cleaning function
- Metal oil cup which is 5 times bigger than traditional size
- LED light
- Recommended installation height from gas hob: 400mm ~ 500mm
- Recommended installation height from electric hob: 300mm ~ 450mm
- Chimney cover
  -1st Glass Chimney
  -2nd Metal Chimney
- Stainless steel wall cap
- 3 meters aluminum hose (hose dimension: 180mm (7"))
- Coring dimension at wall for installing wall cap: 150mm (6")
- Included: a connector will be provided to connect 180mm to 150mm for easy installation

Plug Used:

13amp

Motion Sensor Technology

TripleGuard Filters Up to 99%* of Grease

Glass Chimney Cover

Heat Auto Cleaning

Motion Sensor Technology | TripleGuard Filters | High Suction Power | LED Lamp | Soft Touch Sensor | Tempered Glass | Time Delay | LCD Display | Smart Cleaning

Installation fees is NOT included for all the price stated above & price is subject to change without prior notice

PREMIUMX **CH938iAC** Twin Turbo Motor intelClean Cooker Hood **Retail Price: EM: RM3,749 WM: RM3,549**

Model No:SZ-CH938iAC

Highlights:

- Twin motor with standalone operation
- Dual auto-clean function (Heat & Steam)
- Suction power up to 2000 m3/h
- Motion Sensor Technology with Timer Functions
- 4 speeds power
- LED light
- Recommended installation height from gas hob: 400mm ~ 500mm
- Recommended installation height from electric hob: 300mm ~ 450mm
- 2 pcs Metal Chimney Cover
- Stainless steel wall cap
- 3 meters aluminium hose (Hose dimension: 180mm (7"))
- Coring dimension at wall for installing wall cap: 150mm (6")
- Included: a connector will be provided to connect 180mm to 150mm for easy installation

Plug Used:

13amp

Motion Sensor Technology

Twin Motor

Twin Motor with Standalone Operation

Easy to Clean Motor can be Clean Throughly

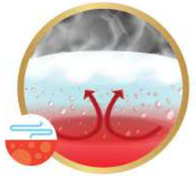

Dual Auto Cleaning (Heat and Steam)

Motion Sensor Technology | Standalone Operation | High Suction Power | LED Lamp | Soft Touch Sensor | Tempered Glass | Time Delay | LCD Display | Smart Cleaning

Installation fees is NOT included for all the price stated above & price is subject to change without prior notice

PREMIUMX NEW VELOZ L Shape Design Heat Pro intelClean Cooker Hood

Retail Price: EM: RM3,199 WM: RM2,999

Model No:SZ-CH9810DC

Highlights:

- BLDC motor consumes less electricity with up to 1900Pa
- Noise level as low as 45 dB
- AI Grease Smart function – able to detect the level of grease and adjust its suction power accordingly.
- Suction power: 2000 m3/h (with turbo boost)
- Heat auto cleaning function
- Motion sensor technology
- Exhaust / recirculation option
- Up to 10 speeds power
- Cold plate glass is design to condense the grease and vapor, preventing them from escaping and directing them towards the oil cup for easy cleaning
- Metal oil cup which is 5 times bigger than traditional size
- LED light
- Recommended installation height from gas hob: 400mm ~ 500mm
- Recommended installation height from electric hob: 300mm~ 450mm
- Included 1pcs of Charcoal Filter
- Chimney cover
  -1st Glass Chimney
  -2nd Metal Chimney
- Stainless steel wall cap
- 3 meters aluminum hose (hose dimension: 180mm (7"))
- Coring dimension at wall for installing wall cap: 150mm (6")
  Included: a connector will be provided to connect 180mm to 150mm for easy installation

Plug Used:

13amp

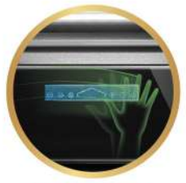

Motion Sensor Technology

Cold Plate Glass (Easy Cleaning)

AI Grease Smart Function

BLDC Motor

Noise Level as Low as 45(db)

Heat Auto Cleaning

PREMIUMX NEW PHOENIX Flexible Base Sealed Burner Gas Stove

Retail Price: EM: RM2,199 WM: RM1,999

Model No:SZ-GS9723FL

Sealed Burner for Easy Cleaning

Special Windshield Energy Saving Wok Rack

Nano Coating

Futex Glass Heat Resistance Tempered Glass

Highlights:

- Flexible base, can fit in variety of built-in hole
- Sealed burner for easy cleaning
- Has up to 5.5kW heat intensity
- Glass with NANO coating for easy cleaning
- Special Windshield Energy Saving Gathering wok rack
- 0 second ignition technology
- Build-in Flame Failure Device (Auto gas cut-off within 10 seconds)
- Heat Resistance Tempered Glass FUTEX
- Battery operated auto-ignition
- Removeable Burner Cap
- Safety Valve
- Gas Type: LPG
- Gas Pressure: 2800 kPA
- Glass Size: 780mm x 460mm
- Free Standing or Built-in
- Built-in Hole Dimension
  - New House : 650mm(W) x 350mm(L)
  - Existing House : 650-750mm(W) x 350-430mm(L)

0 Second IGNITION

Futex Glass | 5.5kW Heat Intensity | Battery Ignition | Safety Valve | Tempered Glass | Premium Cast Iron | SIRIM Certified

REMARKS: USE ONLY LOW PRESSURE REGULATOR FOR THIS APPLIANCE

Low Pressure Regulator | High Pressure Regulator

CAUTION : Please ensure that the burner cap is placed securely and evenly to prevent any gas leaks and potential fire hazards.

Installation fees is NOT included for all the price stated above & price is subject to change without prior notice

PREMIUMX NEW CRISTAL Anti-Dry Burning Technology Twin Burner Gas Stove

Retail Price: EM: RM1,999 WM: RM1,799

Model No:SZ-GS6255

Special Windshield Energy Saving Wok Rack

Futex Glass Heat Resistance Tempered Glass

Anti-Dry Burning Technology

Nano Coating

Highlights:

- Flexible base, can fit in variety or build-in hole
- Anti-Dry Burning technology for left burner only
- Has up to 5.3kW heat intensity
- Burner distance 30%* bigger than traditional stove
- Glass with NANO coating for easy cleaning
- Special Windshield Energy Saving Gathering wok rack x 2
- 0 second ignition technology
- Build-in Flame Failure Device (Auto gas cut-off within 10 seconds)
- Heat Resistance Tempered Glass FUTEX
- Battery operated auto-ignition
- Removable burner cap
- Safety valve
- Gas Type: LPG
- Gas Pressure: 2800 kPA
- Glass Size: 860mm x 500mm
- Free Standing or Built-in
- Built-in Hole Dimension
  - New House : 800mm(W) x 440mm(L)
  - Existing House : 800-830mm(W) x 440-470mm(L)

0 Second IGNITION

Anti Dry Burning Technology | First in Malaysia | 5.3kW Heat Intensity | Battery Ignition | Safety Valve | Tempered Glass | Premium Cast Iron | SIRIM Certified | Futex Glass

REMARKS: USE ONLY LOW PRESSURE REGULATOR FOR THIS APPLIANCE

Low Pressure Regulator | High Pressure Regulator

Remarks: This model is equipped with anti-dry burning technology to enhance safety measures.It activates automatically when temperatures reach 290°C or higher to prevent overheating and potential accidents. Thus constant deep frying in high temperature might actives anti-drying technology as a safety measures that you may take into consideration. Due to the unique heat concentration properties of claypots, they may trigger this automatic turn off gas function. Therefore, we do not recommend using claypot and ceramic cookware on the burner that equipped with Anti-Drying Technology.

PREMIUMX NEW TRESOR Anti-Dry Burning Technology Tri-Plate Burner Gas Stove

Retail Price: EM: RM2,199 WM: RM1,999

Model No:SZ-GS8355

*The anti-drying technology is not available for center burner

Special Windshield Energy Saving Wok Rack

Futex Glass Heat Resistance Tempered Glass

Anti-Dry Burning Technology

Nano Coating

Highlights:

- Flexible Base, can fit in variety or build-in hole
- Anti-Drying technology for left burner only
- Has up to 5.3kW heat intensity, center 2.0kW
- Glass with NANO coating for easy cleaning
- Special Windshield Energy Saving Gathering wok rack x2
- Fast ignition technology
- Build-in Flame Failure Device (Auto gas cut-off within 10 seconds)
- Heat Resistance Tempered Glass FUTEX
- Battery operated auto-ignition
- Removable burner cap
- Safety valve
- Gas Type: LPG
- Gas Pressure: 2800 kPA
- Glass Size: 860mm x 500mm
- Free Standing Built-in
- Built-in Hole Dimension
  - New House : 800mm(W) x 440mm(L)
  - Existing House : 800-830mm(W) x 440-470mm(L)

FAST IGNITION

Anti Dry Burning Technology | First in Malaysia | 5.3kW Heat Intensity | Battery Ignition | Safety Valve | Tempered Glass | Premium Cast Iron | SIRIM Certified | Futex Glass

REMARKS: USE ONLY LOW PRESSURE REGULATOR FOR THIS APPLIANCE

Low Pressure Regulator | High Pressure Regulator

Remarks: This model is equipped with anti-dry burning technology to enhance safety measures.It activates automatically when temperatures reach 290°C or higher to prevent overheating and potential accidents. Thus constant deep frying in high temperature might actives anti-drying technology as a safety measures that you may take into consideration. Due to the unique heat concentration properties of claypots, they may trigger this automatic turn off gas function. Therefore, we do not recommend using claypot and ceramic cookware on the burner that equipped with Anti-Drying Technology.

CAUTION : Please ensure that the burner cap is placed securely and evenly to prevent any gas leaks and potential fire hazards.

OPERATION : 1) Pressed and hold the knob for 3 – 5 seconds before turning it. 2) After flame ignites, keep pressing the knob for 5 more seconds before releasing it to prevent the flame from going out.

REMARK : When either of the knobs is pressed, both ignition pins will light up, indicating that the gas is ready to ignite. However, the gas supply for each burner is separate, so only the burner that has been turned on will ignite and produce a flame.

Installation fees is NOT included for all the price stated above & price is subject to change without prior notice

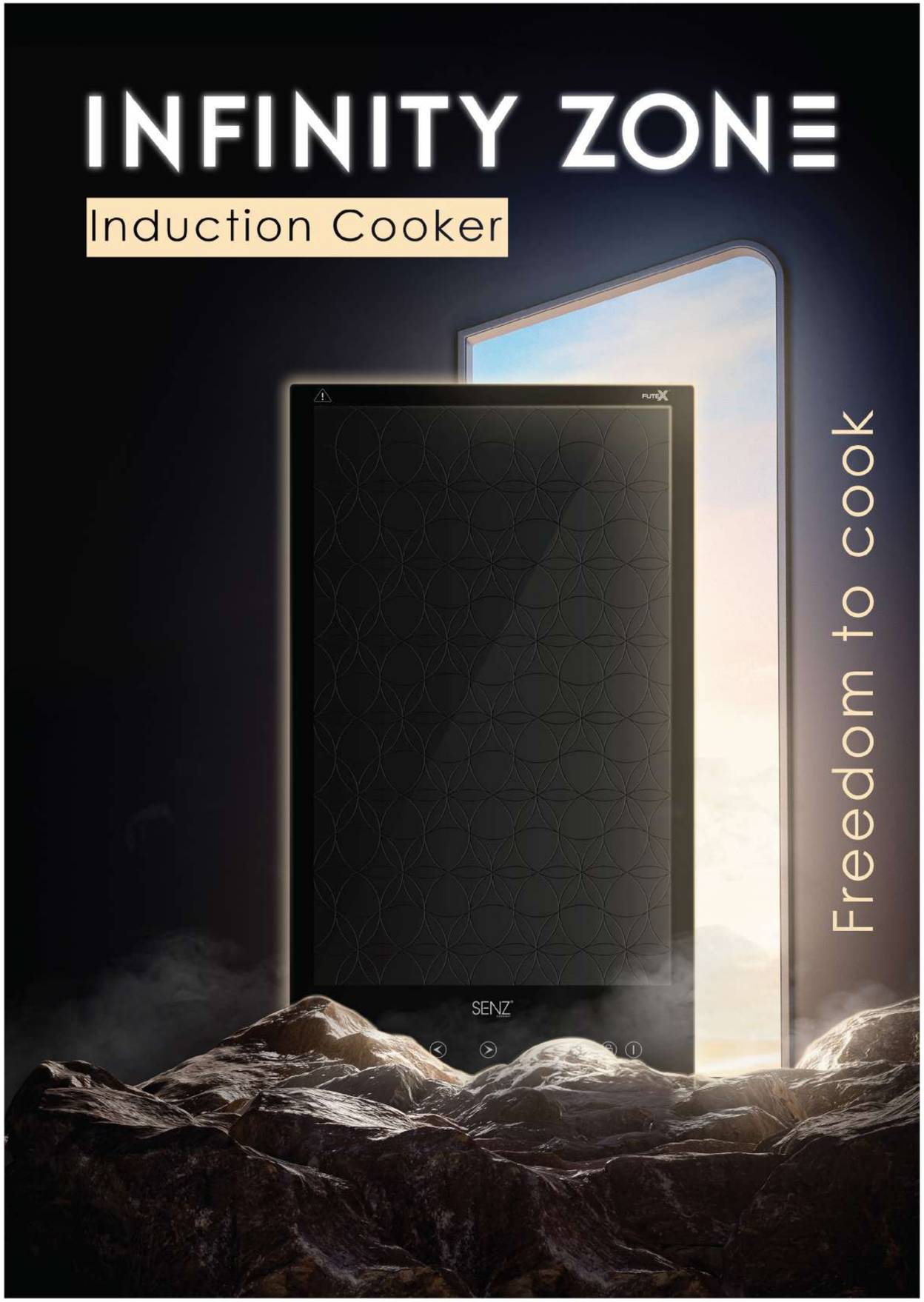

PREMIUMX NEW **INFINITYZONE** induction Cooker

Retail Price: EM: RM3,799 WM: RM3,599

Model No:SZ-DI798-M

Pattern-Finished
Surface

Infinity Cooking Zone
Heat Technology

Suit for all cookware materials

Stainless Steel | Normal Steel | Aluminium Non-stick

Highlights:

- Glass Panel : Matte-finished, Heat Resistance Ceramic Glass FUTEX
- Heating Element : Latest infinity cooking zone heat technology
- Button Design : Touch control system, LED display
- Glass Size : 510mm x 290mm
- Function : Infinity Zone cooking area designed to accommodate multiple pots simultaneously
- Power Supply : 220 – 240V – 50Hz
- Standby Electricity : 2W
- Cooking Zone : Infinity Zone (freedom to cook)
- Cooking Range : 4400W
- Timer : 1440 minutes (24 hours)
- Auto-Cut Off : 120 minutes
- Electronic overheating protection
- Free Standing or Built-in
- Built-in Hole Dimension : 495mm (W) x 275mm (L)

Product Features:

- Hourly electric consumption as low as RM 0.20 per hour
- Matte-finished surface
- Heat Resistance
- Easy-to-clean
- Child Safety Lock

Plug Used:

13amp

PREMIUMX NEW **INFINITYZONE** induction Cooker

Retail Price: EM: RM3,799 WM: RM3,599

Model No:SZ-DI798-G

Infinity Cooking Zone
Heat Technology

Suit for all cookware materials

Stainless Steel | Normal Steel | Aluminium Non-stick

Highlights:

- Glass Panel : Heat Resistance Ceramic Glass FUTEX
- Heating Element : Latest infinity cooking zone heat technology
- Button Design : Touch control system, LED display
- Glass Size : 510mm x 290mm
- Function : Infinity Zone cooking area designed to accommodate multiple pots simultaneously
- Power Supply : 220 – 240V – 50Hz
- Standby Electricity : 2W
- Cooking Zone : Infinity Zone (freedom to cook)
- Cooking Range : 4400W
- Timer : 1440 minutes (24 hours)
- Auto-Cut Off : 120 minutes
- Electronic overheating protection
- Free Standing or Built-in
- Built-in Hole Dimension : 495mm (W) x 275mm (L)

Product Features:

- Hourly electric consumption as low as RM 0.20 per hour
- Gloss finished surface
- Heat Resistance
- Easy-to-clean
- Child Safety Lock

Plug Used:

13amp

Installation fees is NOT included for all the price stated above & price is subject to change without prior notice

PREMIUMX NEW

TRINITY Twin Burner Gas Stove with intelSync Technology

Retail Price: EM: RM2,199 WM: RM1,999

Model No:SZ-GS9888

Special Stainless Steel Frame

Futex Glass
Heat Resistance Tempered Glass

AI IntelSync
Technology

Highlights:

- Equip with latest intelSync Technology (This function ONLY available when you pair with Aurora DC / Zaffiro DC Cooker Hood)
- Functions as below:
  - Smart AI ON / OFF function: Hood will switch ON / OFF automatically when you turn on your Trinity Gas Stove
- Has up to 5.3 kW heat intensity
- Timer function for 99 minutes (*one time set one side only)
- 0 seconds ignition technology
- Build-in Flame Failure Device (Auto gas cut-off within 10 seconds)
- Heat Resistance Tempered Glass FUTEX
- Battery operated auto-ignition
- Removable burner cap
- Easy to clean
- Safety valve
- Gas Type: LPG
- Gas Pressure: 2900 kPA
- Glass Size: 800mm x 450mm
- Free Standing or Built-in
- Built-in Hole Dimension : 780mm (W) x 430mm (L)

Timer
Up to 99 Minutes

Exclusive SENZ Logo
on Burner Cap

AI intelSync Technology | 0 Second IGNITION

Futex Glass | 5.3kW Heat Intensity | IntelSync Technology | Battery Ignition | Safety Valve | Tempered Glass | Premium Cast Iron | SIRIM Certified

REMARKS: USE ONLY LOW PRESSURE REGULATOR FOR THIS APPLIANCE
Low Pressure Regulator | High Pressure Regulator

CAUTION : Please ensure that the burner cap is placed securely and evenly to prevent any gas leaks and potential fire hazards.

PREMIUMX NEW

CARTERRA 3 Plate 2 in 1 Smart Cooker

Retail Price: EM: RM3,849 WM: RM3,649

Model No:SZ-RI8800i

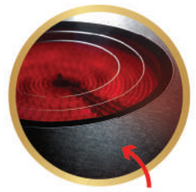

Matte-Finished
Surface

Highlights:

- Glass Panel : Matte-finished, Heat Resistance Ceramic Glass FUTEX
- Heating Element : Germany EGO
- Button Design : Touch button
- Glass Size : 860mm x 450mm
- Function : Induction + Hi-Light Cooker Cook, stir-fry, steam, stew, barbeque, grille, simmer, roast
- Power Supply : 220 – 240V – 50 / 60Hz
- Standby Electricity : 2W
- Cooking Zone : 4
- Cooking Range : Total Power Sharing 3200W, Left & Right highest : 0W – 2200 W Middle Zone : 0W – 800 W, Inner Zone : 0W – 1000W, Outer Zone : 0W – 2200W
- Timer : 1440 minutes (24 hours)
- Auto-Cut Off : 60 minutes
- Electronic overheating protection
- Free Standing or Built-in
- Built-in Hole Dimension : 845mm(W) x 435mm(L)

Product Features:

- Power sharing to save more energy
- Highest cooking up to Power 12, reach up to 574°C in 10 minutes.
- Hourly electricity consumption as low as RM 0.20 per hour*
- Matte-finished surface
- Heat Resistance
- Easy-to-clean
- Child Safety Lock

Plug Used

Direct Built-in Wiring

Suit for all cookware materials

Claypot | Ceramic | Glass | Copper | Cast Iron | Stainless Steel | Normal Steel | Aluminium Non-stick

PREMIUMX

RI3600i 2 in 1 Tri-Ringz Smart Cooker

Retail Price: EM: RM2,949 WM: RM2,749

Model No:SZ-RI3600i

Highlights:

- Glass Panel : Matte-finished, Heat Resistance Ceramic Glass FUTEX
- Heating Element : Latest triple cooking zone heat technology
- Button Design : Touch control system, LED display
- Glass Size : 750mm x 420mm
- Function : Induction + Hi-Light Cooker Cook, stir-fry, steam, stew, barbeque, grille, simmer, roast
- Power Supply : 220 – 240V – 50Hz
- Standby Electricity : 2W
- Cooking Zone : 4
- Cooking Range : Left Power 2200W, Right 2400W
- Timer : 1440 minutes (24 hours)
- Heat Adjustment : Pre-set Heat Level : Low, Medium, High (0-13 Level)
- Auto-Cut Off : 60 minutes
- Electronic overheating protection
- Free Standing or Built-in
- Built-in Hole Dimension : 730mm (W) x 400mm (L)

Product Features:

- Highest cooking up to Power 13, reach up to 574°C in 10 mins
- Hourly electric consumption as low as RM 0.20 per hour
- Matte-finished surface
- Heat Resistance
- Easy-to-clean
- Child Safety Lock

Plug Used

Direct Built-in Wiring

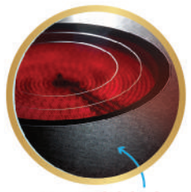

Matte-Finished
Surface

Up to 13 Level
of Heat Adjustment

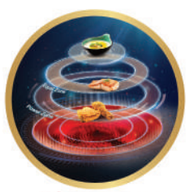

Tri-Zones Heat
Technology

Suit for all cookware materials

Claypot | Ceramic | Glass | Copper | Cast Iron | Stainless Steel | Normal Steel | Aluminium Non-stick

PREMIUMX NEW

RC8200i LED Button Double Ceramic Multicooker

Retail Price: EM: RM3,249 WM: RM3,049

Model No:SZ-RC8200i

Highlights:

- Glass Panel : Heat Resistance Ceramic Glass FUTEX
- Heating Element : Germany EGO
- Button Design : Touch button (Special Invisible LED)
- Glass Size : 765mm x 435mm
- Function : Cook, stir-fry, steam, stew, barbeque, grille, simmer, roast
- Power Supply : 220 – 240V – 50 / 60Hz
- Standby Electricity : 4W
- Cooking Zone : 4Casing : Conceal and physical separating casing
- Cooking Range : Left and Right Zone: 0W – 2200W, Inner Zone: 0W – 1000W, Outer Zone: 0W – 2200W
- Timer : 1440 minutes (24 hours)
- Heat Adjustment : Pre-set heat level: Low, Medium, High (0-12 level)
- Auto-Cut Off : 60 minutes
- Electronic overheating protection
- Free Standing or Built-in
- Built-in Hole Dimension : 730mm (W) x 400mm (L)

Product Features:

- Highest cooking of up to Power 12, reach up to 574°C within 10 minutes
- Hourly electric consumption as low as RM 0.20 per hour*
- Gloss finished surface
- Heat resistance
- Easy-to-clean
- Child Safety Lock

Plug Used

Direct Built-in Wiring

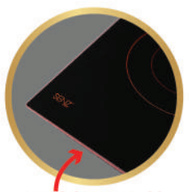

Special Rose Gold
Frame Design

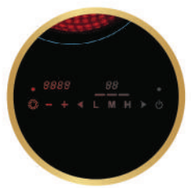

Invisible Button
of Heat Adjustment

Suit for all cookware materials

Claypot | Ceramic | Glass | Copper | Cast Iron | Stainless Steel | Normal Steel | Aluminium Non-stick

Installation fees is NOT included for all the price stated above & price is subject to change without prior notice

Installation fees is NOT included for all the price stated above & price is subject to change without prior notice

PREMIUMX **All-in-One Flexi Steam Pro** intelClean Oven — Retail Price: **EM: RM6,199 WM: RM5,999**

Model No:SZ-SOV70108

Highlights:

- All in 1 functions
- Capacity: 70 litres
- Operating Frequency: 3000W
- External Water Container: 1000ml capacity
- Cooking function: Steam, Bake (8 baking modes), Air-Fry, Steam + Grill
- 108 Preset Auto Menu – Effortlessly cook like a pro with our oven's auto menu – simply select your dish and let the oven do the rest
- Triple glazed tempered glass
- Child Safety Lock

Accessories Included:

- Baking Tray x1
- Drip Tray x1
- Air Fry Basket x 1
- Removable Inner Rack x2

All in 1 functions:

- Fermentation: offers 40%* faster and more efficient way to prepare doughs and fermented foods
- Disinfection mode: quick and convenient way for busy parents to sanitize baby products and other kitchen tools
- Keep warm function: allows you to prepare meals ahead of time without worrying about food getting cold or losing its texture and flavor
- Steam auto cleaning function: uses high temperatures to steam off food residue and grease, eliminating the need for time-consuming manual cleaning
- Drying: to dry the oven inner body
- Defrost: to defrost food

Plug Used:

13amp

108 Auto Menu Function | **70L Capacity** | **External Water** Container | **Smart Auto** Cleaning | **Ferment** Dough | **Keep Warm** | **Disinfection** Mode

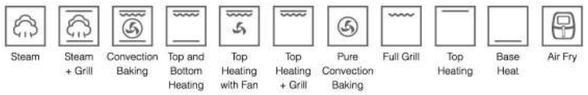

WM: RM5,099*
EM: RM5,299*
PWP

Remarks: There will be a variance of ±20°C from the temperature set during operation

***Purchase with Purchase (PWP) is applicable with purchase of MultiHood + MultiCooker package only**

Installation fees is NOT included for all the price stated above & price is subject to change without prior notice

PREMIUMX NEW **SZ-BC1008** Retro Multi-Functional Cooler — Retail Price: **EM: RM2,899 WM: RM2,699**

Model No:SZ-BC1008

LED Light

Low Emissivity Glass (Low-E)

Retro Style Curve Handle

Removable Shelf for Easy Cleaning

Highlights:

- Free Standing
- Capacity: 85L / 70 cans / 34 (red wine) bottles
- 4 Color Options available
- Temperature Range: 2-20°C
- Electronic Touchpad Control
- LED display light
- Retro Style Curve Handle
- Removable Shelf for easy cleaning
- Child Safety Lock

Accessories Included:

- Wire Flat Shelf x 4
- Adjustable Foot x4

Plug Used:

13amp

CAUTION!

	FROST OR WATER DROPLETS may form inside the cooler during use, which is normal and won't affect its function.
	AVOID LEANING ON OR PRESSING the open door of the cooler to prevent it from tilting forward.
	TO PREVENT items from falling out when opening the door, avoid overfilling the cooler.
	It's normal for the sides of the cooler to become **WARM** due to refrigeration. Exercise caution.

Installation fees is NOT included for all the price stated above & price is subject to change without prior notice

PREMIUM X Collection

SENZ CH938iAC

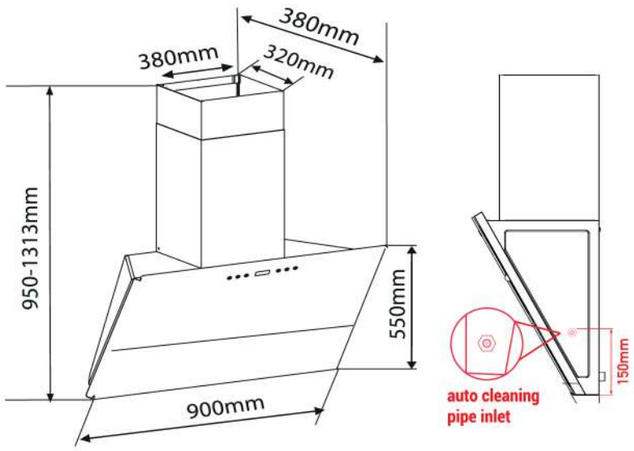

SENZ ESTILLA(CH9090AC)

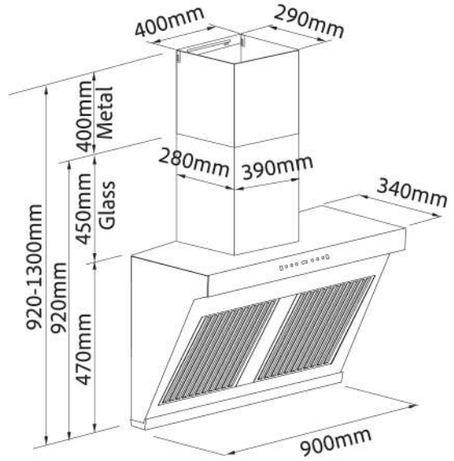

PREMIUM X Collection

SENZ KARINO(GS3898)

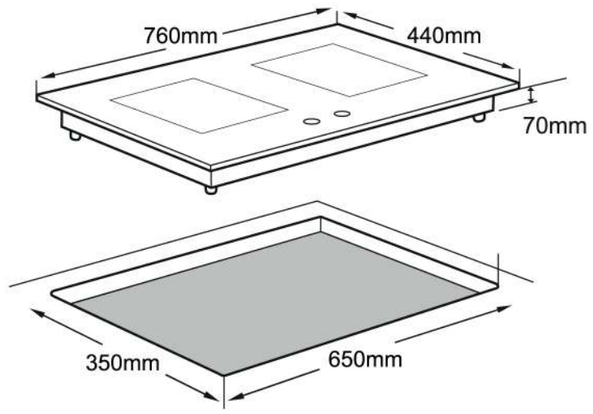

SENZ TRINITY(GS9888)

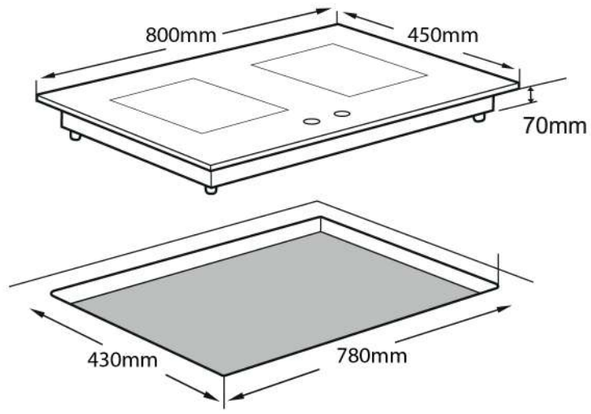

SENZ AURORA DC(CH9050AC)

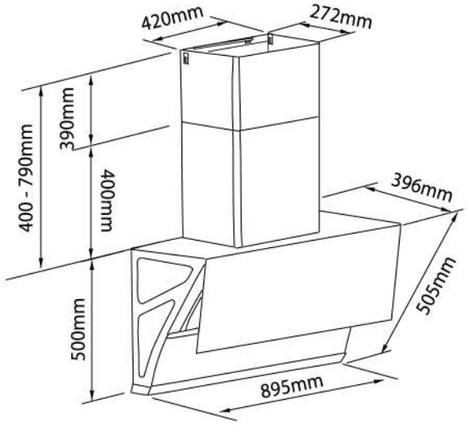

SENZ ZAFFIRO(CH9130AC)

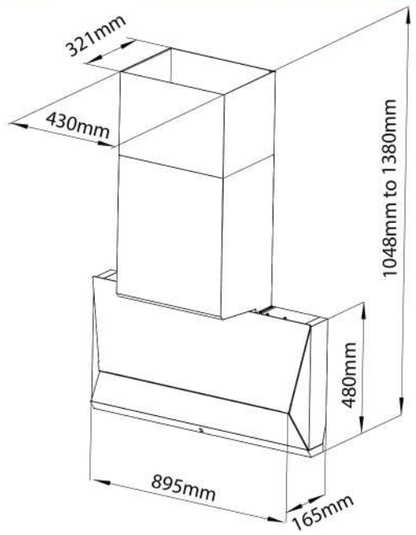

SENZ CARTERRA(RI8800i)

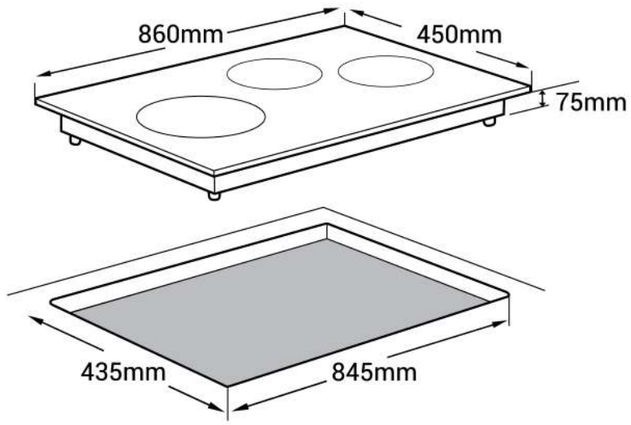

SENZ INFINITY ZONE(DI798-M)

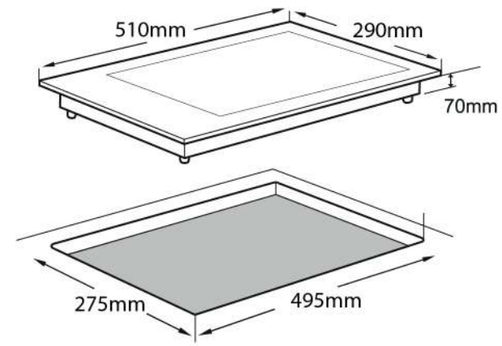

SENZ VELOZ(CH9810DC)

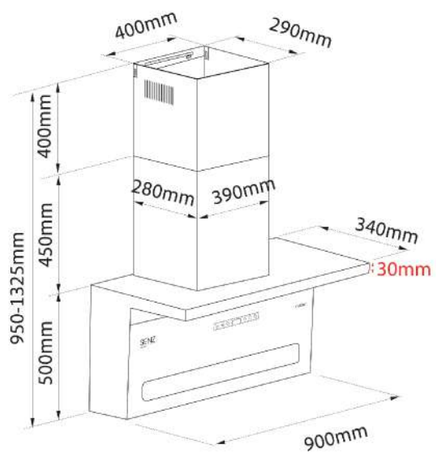

SENZ CRISTAL(GS6255)

For Existing Hole

Dimension

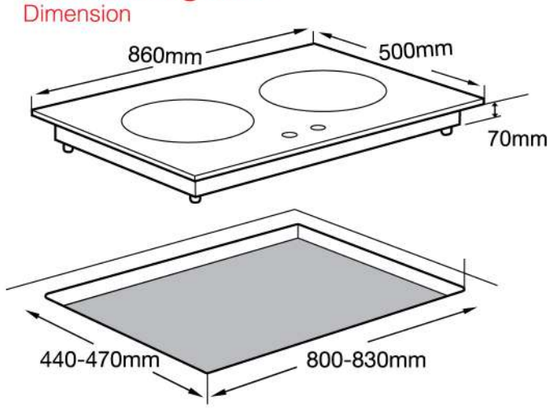

For New House

Dimension

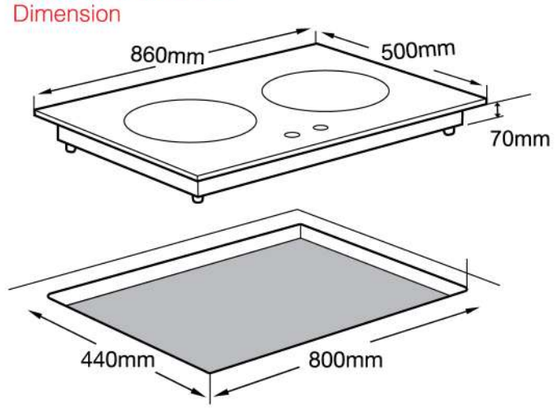

PREMIUM X Collection

SENZ TRESOR(GS8355)

For Existing Hole
Dimension

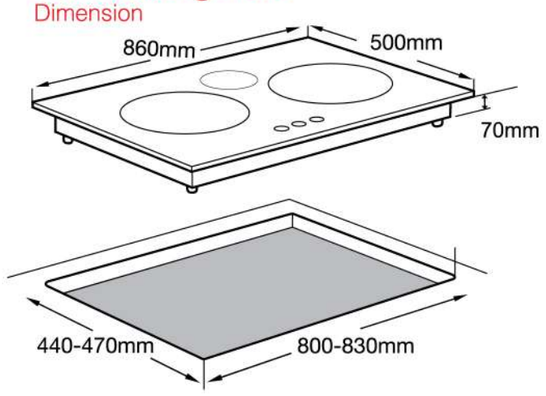

For New House
Dimension

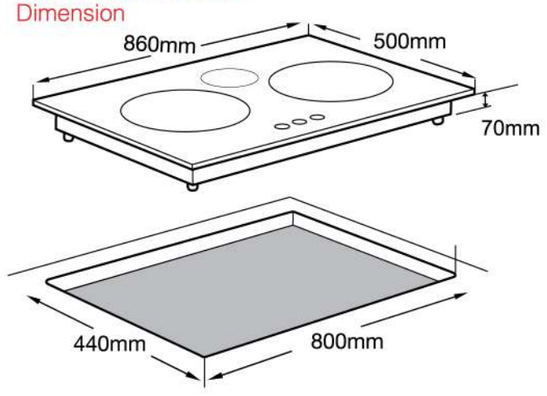

SENZ PHOENIX(GS9723FL)

For Existing Hole
Dimension

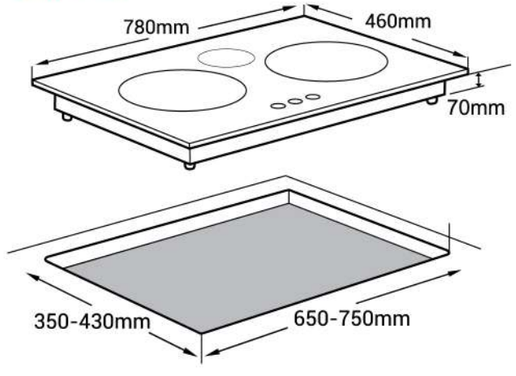

For New House
Dimension

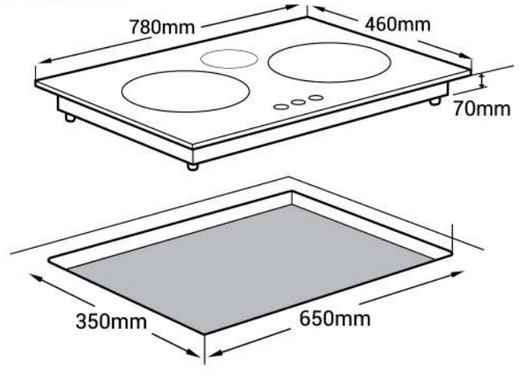

SENZ RI3600i

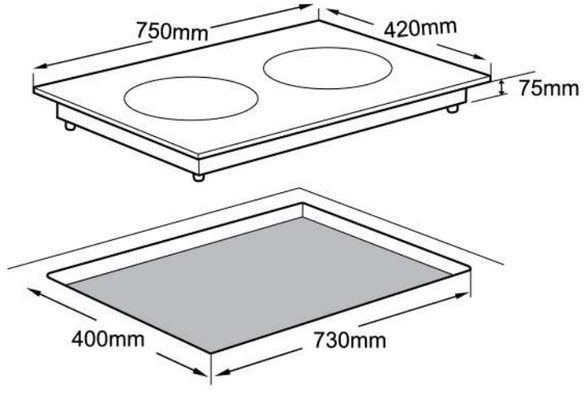

SENZ RC8200i

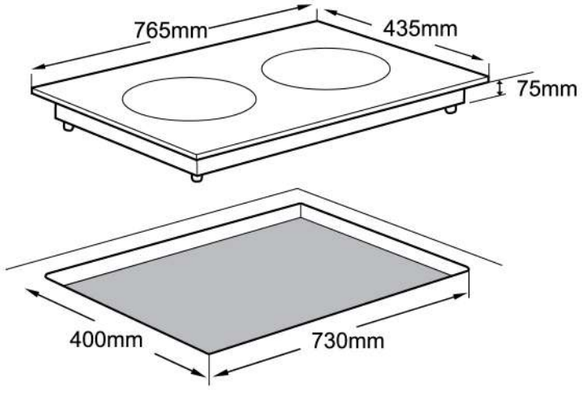

PREMIUM X Collection

SENZ ALL-IN-ONE Flexi Steam Pro(SOV70108)

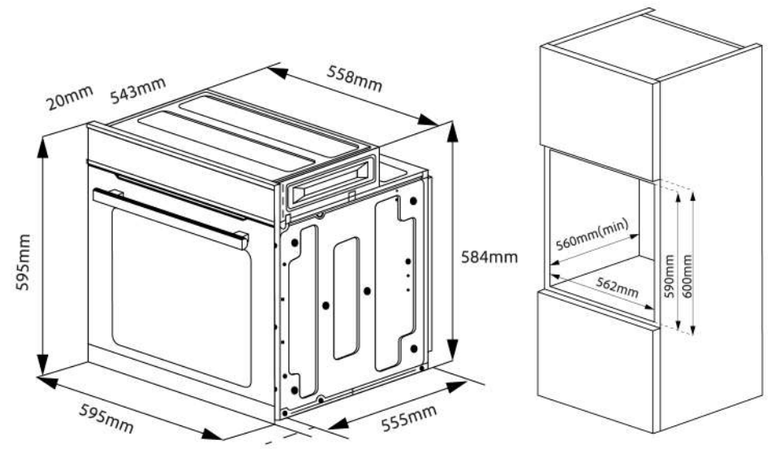

SENZ BC1008

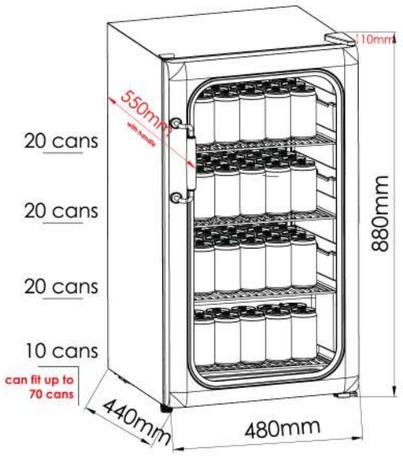

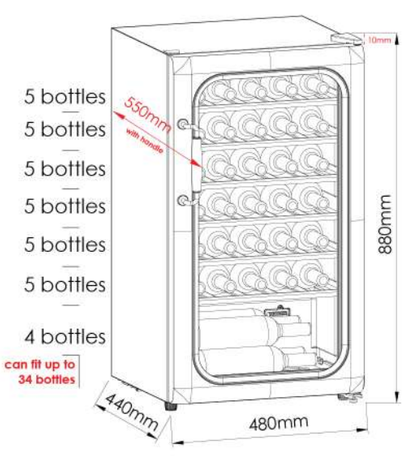

PREMIUM

Collection

ADEL

Compact L Shape HeatPro
intelClean™ Cooker Hood

VISTA

Slim L Shape Design Heat Pro
intelClean™ Cooker Hood

PREMIUM NEW — ADEL Compact L Shape HeatPro intelClean Cooker Hood

Retail Price: EM: RM2,999 WM: RM2,799

Model No: SZ-CH9560DC

Highlights:

- Compact L shape design with black tempered glass which makes it very easy to clean
- BLDC Motor consumes less electricity
- Noise level as low as 45 db
- Suction power: 2000 m3/h (with turbo boost)
- Heat auto cleaning function
- Motion sensor technology
- Exhaust / recirculation option
- Up to 9 speeds power
- Cold plate glass is design to condense the grease and vapor, preventing them from escaping and directing them towards the oil cup for easy cleaning
- Metal oil cup which is 5 times bigger than traditional size
- Full LED lights panel
- Recommended installation height from gas hob: 400mm ~ 500mm
- Recommended installation height from electric hob: 300mm ~ 450mm
- 2 pcs Metal Chimney Cover
- Stainless steel wall cap
- 3 meters aluminium hose (hose dimension: 180mm (7"))
- Coring dimension at wall for installing wall cap: 150mm (6")
- Included: a connector will be provided to connect 180mm to 150mm for easy installation

Optional Accessories:

- Charcoal filter

Plug Used:

13amp

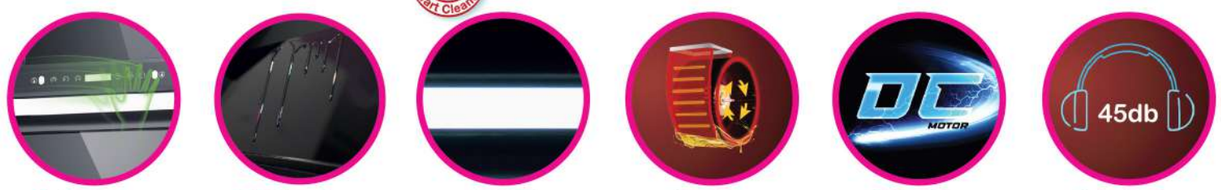

Motion Sensor Technology | **Cold Plate Glass** (Easy Cleaning) | **Full LED** Panel | **Heat Auto** Cleaning | **BLDC Motor** | **Noise Level as** Low as 45(db)

Motion Sensor Technology · Smart Cleaning · High Suction Power · LED Panel · Soft Touch Sensor · Tempered Glass · Time Delay · Easy Cleaning Oil Filter · LCD Display · Charcoal Filter · Cold Plate Glass

Installation fees is NOT included for all the price stated above & price is subject to change without prior notice

PREMIUM NEW — VISTA Slim L Shape Design Heat Pro intelClean Cooker Hood

Retail Price: EM: RM3,199 WM: RM2,999

Model No: SZ-CH9670DC

Highlights:

- Sleek and Modern L shape design with black tempered glass with rose gold design
- BLDC motor consumes less electricity with up to 2000Pa
- Noise level as low as 45 dB
- AI Grease Smart function – able to detect the level of grease and adjust its suction power accordingly
- Suction power: 2000 m3/h (with turbo boost)
- Heat auto cleaning function
- Motion sensor technology
- Exhaust / recirculation option
- Up to 5 speeds power
- Cold plate glass is design to condense the grease and vapor, preventing them from escaping and directing them towards the oil cup for easy cleaning
- Metal oil cup which is 5 times bigger than traditional size
- LED light
- Recommended installation height from gas hob: 400mm ~ 500mm
- Recommended installation height from electric hob: 300mm~ 450mm
- Included 1pcs of Charcoal Filter
- Chimney cover
  -1st Glass Chimney
  -2nd Metal Chimney
- Stainless steel wall cap
- 3 meters aluminum hose (hose dimension: 180mm (7"))
- Coring dimension at wall for installing wall cap: 150mm (6")
- Included: a connector will be provided to connect 180mm to 150mm for easy installation

Optional Accessories:

- Charcoal filter

Plug Used:

13amp

Motion Sensor Technology | **Cold Plate Glass** (Easy Cleaning) | **AI Grease** Smart Function | **BLDC** Motor | **Noise Level as** Low as 45(db) | **Heat Auto** Cleaning

Motion Sensor Technology · Smart Cleaning · High Suction Power · LED Panel · Soft Touch Sensor · Tempered Glass · Time Delay · Easy Cleaning Oil Filter · LCD Display · Charcoal Filter · Cold Plate Glass

Installation fees is NOT included for all the price stated above & price is subject to change without prior notice

PREMIUM

STELLA L Shape Design Heat Pro IntelClean Cooker Hood

Retail Price: EM: RM2,399 WM: RM2,199

Model No:SZ-CH3288AC

Highlights:

- Sleek and modern L shape design with black tempered glass which makes it very easy to clean
- Suction power: 1700 m3/h (with turbo boost)
- Heat auto cleaning function
- Motion sensor technology
- Exhaust / recirculation option
- Cold plate glass is design to condense the grease and vapor, preventing them from escaping and directing them towards the oil cup for easy cleaning
- Metal oil cup which is 5 times bigger than traditional size
- Full LED lights panel
- Recommended installation height from gas hob: 400mm ~ 500mm
- Recommended installation height from electric hob: 300mm~ 450mm
- 2pcs Metal Chimney Cover
- Stainless steel wall cap
- 3 meters aluminum hose (hose dimension: 180mm (7"))
- Coring dimension at wall for installing wall cap: 150mm (6")
- Included: a connector will be provided to connect 180mm to 150mm for easy installation

Optional Accessories:

- Charcoal filter

Plug Used:

13amp

Motion Sensor Technology

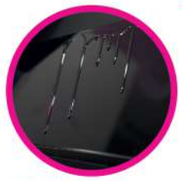

Cold Plate Glass (Easy Cleaning)

Full LED Panel

Heat Auto Cleaning

Motion Sensor Technology · Smart Cleaning · High Suction Power · LED Panel · Soft Touch Sensor · Tempered Glass · Time Delay · Easy Cleaning Oil Filter · LCD Display · Charcoal Filter · Cold Plate Glass

PREMIUM

CH9388AC Heat Pro intelClean Cooker Hood

Retail Price: EM: RM2,249 WM: RM2,049

Model No:SZ-CH9388AC

Highlights:

- Sleek and modern design with black tempered glass which makes it very easy to clean
- Suction power: 1400 m3/h
- Heat auto cleaning function
- Exhaust / recirculation option
- Twin Charcoal Filter
- Metal oil cup which is 5 times bigger than traditional size
- LED lights
- Recommended installation height from gas hob: 400mm ~ 500mm
- Recommended installation height from electric hob: 300mm ~ 450mm
- 2pcs Metal Chimney Cover

Optional Accessories:

- 3 meters aluminum hose (Hose dimension: 150mm (6"))
- Stainless steel wall cap

Plug Used:

13amp

Metal Filter

Twin Charcoal Filter

Easy To Clean

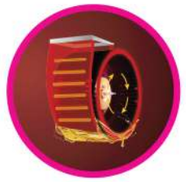

Heat Auto Cleaning

Smart Cleaning · High Suction Power · LED Lamp · Soft Touch Sensor · Tempered Glass · Time Delay · Easy Cleaning Oil Filter · LCD Display · Charcoal Filter

PREMIUM NEW

STELLA DC L Shape Design Heat Pro IntelClean Cooker Hood

Retail Price: EM: RM2,599 WM: RM2,399

Model No:SZ-CH9166DC

Highlights:

- BLDC motor consumes less electricity with up to 1900Pa
- Noise level as low as 45 dB
- AI Grease Smart function – able to detect the level of grease and adjust its suction power accordingly.
- Suction power: 2000 m3/h (with turbo boost)
- Heat auto cleaning function
- Motion sensor technology
- Exhaust / recirculation option
- Up to 10 speeds power
- Cold plate glass is design to condense the grease and vapor, preventing them from escaping and directing them towards the oil cup for easy cleaning
- Metal oil cup which is 5 times bigger than traditional size
- LED light
- Recommended installation height from gas hob: 400mm ~ 500mm
- Recommended installation height from electric hob: 300mm~ 450mm
- 2pcs Metal Chimney Cover
- Stainless steel wall cap
- 3 meters aluminum hose (hose dimension: 180mm (7"))
- Coring dimension at wall for installing wall cap: 150mm (6")
- Included: a connector will be provided to connect 180mm to 150mm for easy installation

Optional Accessories:

- Charcoal filter

Plug Used:

13amp

Motion Sensor Technology

Cold Plate Glass (Easy Cleaning)

AI Grease Smart Function

BLDC Motor

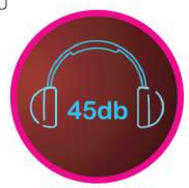

Noise Level as Low as 45(db)

Heat Auto Cleaning

Motion Sensor Technology · Smart Cleaning · High Suction Power · LED Panel · Soft Touch Sensor · Tempered Glass · Time Delay · Easy Cleaning Oil Filter · LCD Display · Charcoal Filter · Cold Plate Glass

PREMIUM

BONITA Mystic Grey Heat Pro intelClean Chimney Cooker Hood

Retail Price: EM: RM2,749 WM: RM2,549

Model No:SZ-CH336iAC-G

Highlights:

- Premium grey tempered glass panel
- Suction power: 1600 m3/h (with Turbo Boost)
- Heat auto cleaning function (12 minutes heating and 3 minutes cooldown)
- Air blocking glass panel open automatically when hood is in operation
- Stainless steel buffer filter
- Motion sensor technology
- Exhaust/recirculation option
- 3 speeds power
- LED lights
- Metal oil cup which is 5 times bigger than traditional size
- 2pcs Metal Chimney Cover
- Stainless wall cap
- 3 meters aluminum hose (hose dimension: 180mm (7"))
- Recommended installation height: from gas & electric hob: 600mm – 700mm

Optional Accessories:

- Charcoal filter

Plug Used:

13amp

Motion Sensor Technology

Only 350mm Narrow Body Design

Special Mystic Grey Glass

Heat Auto Cleaning

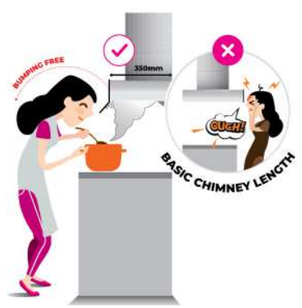

Motion Sensor Technology · Smart Cleaning · High Suction Power · LED Lamp · Soft Touch Sensor · Tempered Glass · Time Delay · Easy Cleaning Oil Filter · LCD Display

Installation fees is NOT included for all the price stated above & price is subject to change without prior notice

Installation fees is NOT included for all the price stated above & price is subject to change without prior notice

PREMIUM NEW

VERA T Shape HeatPro intelClean Cooker Hood

Retail Price: EM: RM2,799 WM: RM2,599

Model No:SZ-CH2268DC

Highlights:

- BLDC Motor consumes less electricity
- Noise level as low as 45 db
- Suction power: 2000 m3/h (with turbo boost)
- Heat auto cleaning function
- Removable triple-layer metal filters
- Motion sensor technology
- Exhaust / recirculation option
- Up to 9 speeds power
- Metal oil cup which is 5 times bigger than traditional size
- LED light
- Recommended installation height: from gas & electric hob: 600mm – 700mm
- Included 1pcs of Charcoal Filter
- Chimney cover
  -1st Glass Chimney
  -2nd Metal Chimney
- Stainless steel wall cap
- 3 meters aluminium hose (hose dimension: 180mm (7"))
- Coring dimension at wall for installing wall cap: 150mm (6")
- Included: a connector will be provided to connect 180mm to 150mm for easy installation

Plug Used:

13amp

Motion Sensor Technology

Triple Layer Metal Filters

Full LED Panel

BLDC Motor

Noise Level as Low as 45(db)

Heat Auto Cleaning

Motion Sensor Technology · Smart Cleaning · High Suction Power · LED Panel · Soft Touch Sensor · Tempered Glass · Time Delay · Easy Cleaning Oil Filter · LCD Display · Charcoal Filter · Cold Plate Glass

PREMIUM NEW

LEON HeatPro intelClean Cooker Hood

Retail Price: EM: RM3,050 WM: RM2,850

Model No:SZ-CH7070DC

Highlights:

- BLDC Motor consumes less electricity
- Noise level as low as 45 db
- AI Grease Smart function – able to detect the level of grease and adjust its suction power accordingly
- Suction power: 2000 m3/h (with turbo boost)
- Heat auto cleaning function
- Motion sensor technology
- Exhaust / recirculation option
- Up to 10 speeds power
- Cold plate glass is design to condense the grease and vapor, preventing them from escaping and directing them towards the oil cup for easy cleaning
- Metal oil cup which is 5 times bigger than traditional size
- LED light
- Recommended installation height from gas hob: 400mm ~ 500mm
- Recommended installation height from electric hob: 300mm ~ 450mm
- Included 1pcs of Charcoal Filter
- Chimney cover
  -1st Glass Chimney
  -2nd Metal Chimney
- Stainless steel wall cap
- 3 meters aluminium hose (hose dimension: 180mm (7"))
- Coring dimension at wall for installing wall cap: 150mm (6")
- Included: a connector will be provided to connect 180mm to 150mm for easy installation

Plug Used:

13amp

Motion Sensor Technology

Cold Plate Glass (Easy Cleaning)

AI Grease Smart Function

BLDC Motor

Noise Level as Low as 45(db)

Heat Auto Cleaning

Motion Sensor Technology · Smart Cleaning · High Suction Power · LED Panel · Soft Touch Sensor · Tempered Glass · Time Delay · Easy Cleaning Oil Filter · LCD Display · Charcoal Filter · Cold Plate Glass

Installation fees is NOT included for all the price stated above & price is subject to change without prior notice

DESIGNED FOR THE MODERN KITCHEN

1 6mm Slim Hidden Concept

Ultra slim design blends seamlessly into your kitchen. Leaving you with an aesthetically pleasing art piece under its spotlight.

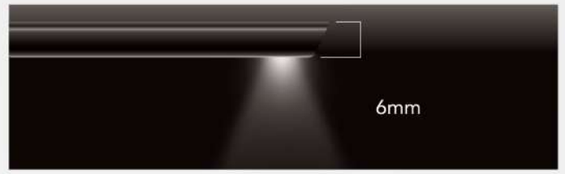

2 Stylish Touch Control

Simplistic panel design with responsive touch control adds a modern appeal to your ease of use.

3 Strong Suction Power

High-efficiency performance effectively removes any oil and odour to help minimise your kitchen cleaning chores.

4 Retractable Flip Glass Panel

Hassle-free retractable mechanism allows for easy cleaning of trapped grease while enhancing overall visual appeal.

5 3-Speeds Power Control

Different power settings to best suit various styles of cooking and ensure optimum efficiency.

THINGS NEED TO TAKE NOTE

before installing our CH1288RC Invisible Hood

STEP 1 : If you can open a hole in your kitchen we will suggest you to **open a hole to extract the grease out.**
P.S. Hose and Wall Cap are sold separately.

STEP 2 : If you are not allowed to open a hole in your kitchen then you need to use our **recirculation system** to operate the Cooker Hood. Recirculation system consist of **Aluminum Filter and Charcoal Filter.**

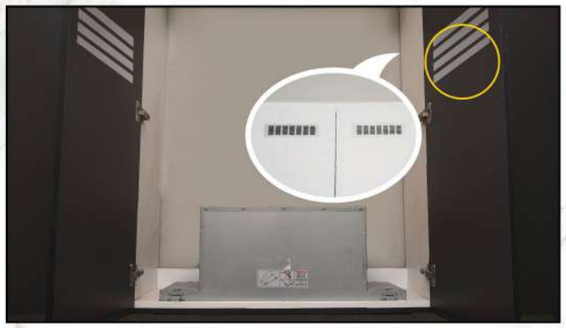

STEP 3 : If you are using recirculation system, please ensure that you have enough ventilation in your cabinet to **allow clean air to flow**. For example, some open ventilation holes on your cabinet door. This can also **prevent your cabinet door from vibrating** while operating the hood.

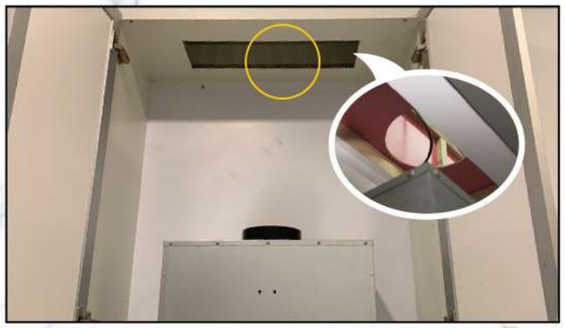

STEP 4 : You can also **open a hole at the top** of your kitchen cabinet.

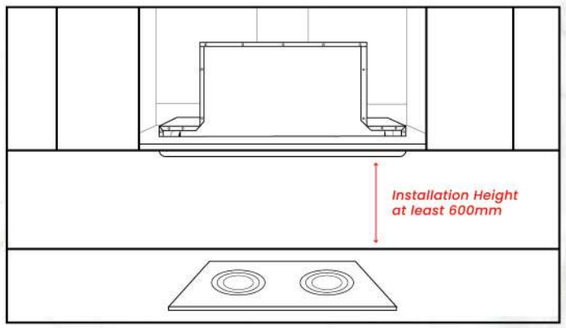

STEP 5 : Kindly take note that the installation height between Cooker Hood and Stove, the recommended installation height is **around 600mm.**

STEP 6 : To avoid the clip from breaking easily, please do not tighten it with **electric drill;** use only **screw driver** to tighten it.

PREMIUM **CH1288RC** Invisible MultiHood — Retail Price: **EM: RM1,949 WM: RM1,749**

Model No:SZ-CH1288RC

Retractable Flip Glass Panel

Mystery Black

Highlights:

- Latest invisible concept & technology from Europe
- Elegant and stylish design with 6mm black tempered glass which makes it very easy to clean
- Suction power: 1200m3/h
- Washable 6 layers aluminum filter & oil cup
- Modern and stylish touch control design for easy operation
- Exhaust / Recirculation option
- Twin Carbon Filters
- 3 speeds power
- LED lights
- Recommended installation height: according to kitchen cabinet height

Optional Accessories:

- 3 meters aluminum hose (hose dimension: 150mm (6"))
- Stainless steel wall cap

Plug Used:

13amp

High Suction Power | LED Lamp | Soft Touch Sensor | Charcoal Filter | Stainless Steel Casing | Time Delay | Easy Cleaning Buffer Filter

Remarks: Kitchen cabinet board thickness cannot exceed 18mm in order to install this invisible hood
Remarks: For recycle mode, please ensure there is enough capacity in the cabinet for air to flow as air that release back by the hood might cause the cabinet door to vibrate during operation. You may consult our authorized dealers or customer service for further clarification.

PREMIUM NEW **BARRISA** HeatPro intelClean Cooker Hood with Rose Gold Design — Retail Price: **EM: RM2,899 WM: RM2,699**

Model No:SZ-CH9832AC

Highlights:

- Sleek and modern L shape design with black tempered glass with rose gold design
- Suction power: 1800 m3/h (with turbo boost)
- Heat auto cleaning function
- Motion sensor technology
- Exhaust / recirculation option
- Cold plate glass is design to condense the grease and vapor, preventing them from escaping and directing them towards the oil cup for easy cleaning
- Metal oil cup which is 5 times bigger than traditional size
- Full LED lights panel
- Recommended installation height from gas hob: 400mm ~ 500mm
- Recommended installation height from electric hob: 300mm ~ 450mm
- Chimney Cover
  -1st Glass Chimney
  -2nd Metal Chimney
- Stainless steel wall cap
- 3 meters aluminium hose (Hose dimension: 180mm (7"))
- Coring dimension at wall for installing wall cap: 150mm (6")
- Included: a connector will be provided to connect 180mm to 150mm for easy installation

Optional Accessories
- Charcoal filter

Plug Used

13amp

Motion Sensor Technology

Cold Plate Glass (Easy Cleaning)

Full LED Panel

Special Rose Gold Frame Design

Heat Auto Cleaning

Motion Sensor Technology | Smart Cleaning | High Suction Power | LED Panel | Soft Touch Sensor | Tempered Glass | Time Delay | Easy Cleaning Oil Filter | LCD Display | Charcoal Filter | Cold Plate Glass

Installation fees is NOT included for all the price stated above & price is subject to change without prior notice

PREMIUM NEW — VISTO Heat Pro intelClean Cooker Hood

Retail Price: EM: RM2,799 WM: RM2,599

Model No:SZ-CH9130AC

Highlights:

- Sleek and modern L shape design with black tempered glass which makes it very easy to clean
- Inner cold plate glass design to condense grease and vapor, preventing them from escaping and directing them to the oil cup for easy cleaning
- Suction power: 1800 m3/h (with turbo boost)
- Motion sensor technology
- Heat auto cleaning function
- Exhaust / recirculation option
- Full LED Panel
- Metal oil cup which is 5 times bigger than traditional size
- Recommended installation height from gas hob: 400mm ~ 500mm
- Recommended installation height from electric hob: 300mm~ 450mm
- 2pcs Metal Chimney Cover
- Stainless steel wall cap
- 3 meters aluminum hose (hose dimension: 180mm (7"))
- Coring dimension at wall for installing wall cap: 150mm (6")
- Included: a connector will be provided to connect 180mm to 150mm for easy installation

Optional Accessories:

- Charcoal filter

Plug Used:

13amp

Motion Sensor Technology

Cold Plate Glass (Easy Cleaning)

Full LED Panel

Removeable Glass Panel

Heat Auto Cleaning

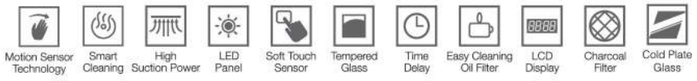

PREMIUM NEW — SENSILLA L Shape Design Heat Pro intelClean Cooker Hood

Retail Price: EM: RM2,799 WM: RM2,599

Model No:SZ-CH8822AC

Highlights:

- Sleek and modern L shape design with black tempered glass which makes it very easy to clean
- Inner cold plate glass design to condense grease and vapor, preventing them from escaping and directing them to the oil cup for easy cleaning
- Suction power: 1800 m3/h
- Motion sensor technology with blue light button
- Heat auto cleaning function
- Exhaust / recirculation option
- Full LED Panel
- Metal oil cup which is 5 times bigger than traditional size
- Recommended installation height from gas hob: 400mm ~ 500mm
- Recommended installation height from electric hob: 300mm~ 450mm
- 2 pcs Metal Chimney Cover
- Stainless steel wall cap
- 3 meters aluminum hose (hose dimension: 180mm (7"))
- Coring dimension at wall for installing wall cap: 150mm (6")
- Included: a connector will be provided to connect 180mm to 150mm for easy installation

Optional Accessories:

- Charcoal filter

Plug Used:

13amp

Motion Sensor Technology

Cold Plate Glass (Easy Cleaning)

Full LED Panel

Removeable Glass Panel

Heat Auto Cleaning

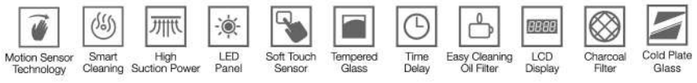

Installation fees is NOT included for all the price stated above & price is subject to change without prior notice

PREMIUM — RI3200i 2 in 1 Smart Cooker

Retail Price: EM: RM2,149 WM: RM1,949

Model No:SZ-RI3200i

Highlights:

- Glass Panel : Matte-finished, Heat Resistance Ceramic Glass FUTEX
- Heating Element : Latest double cooking zone heat technology
- Button Design : Touch control system, LED display
- Glass Size : 690mm x 420mm
- Function : Induction + Hi-Light Cooker Cook, stir-fry, steam, stew, barbeque, grille, simmer, roast
- Power Supply : 220 – 240V – 50 / 60 Hz
- Standby Electricity : 2W
- Cooking Zone : 2
- Cooking Range : Total Power 2800W, Highest 2000W
- Timer : 1440 minutes (24 hours)
- Preset Timer : Up to 720 minutes (12 hours) *for induction side only
- Auto-Cut Off : 60 minutes
- Electronic overheating protection
- Free Standing or Built-in
- Build-in Hole Dimension : 670mm (W) x 400mm (L)

Plug Used:

13amp

Matte-Finished Surface

Preset Timer

Product Features:

- Power sharing to save more energy
- Hourly electric consumption as low as RM 0.20 per hour
- Matte-finished surface
- Heat Resistance
- Easy-to-clean
- Child Safety Lock

Suit for all cookware materials

PREMIUM — RC220FT Double Ceramic MultiCooker

Retail Price: EM: RM2,849 WM: RM2,649

Model No:SZ-RC220FT

Highlights:

- Glass Panel : Matt-Finished Heat Resistance Ceramic Glass FUTEX
- Heating Element : Germany EGO
- Button Design : Touch button
- Glass Size : 690mm x 420mm
- Function : Cook, stir-fry, steam, stew, barbeque, grille, simmer, roast
- Power Supply : 220 – 240V – 50 / 60Hz
- Standby Electricity : 4W
- Cooking Zone : 4
- Cooking Range : Left and Right Zone: 0W – 2200W Inner Zone: 0W – 1000W Outer Zone: 0W – 2200W
- Timer : 1440 minutes (24 hours)
- Heat Adjustment : 0 – 12 level
- Auto-Cut Off : 60 minutes
- Electronic overheating protection
- Free Standing or Built-in
- Build-in Hole Dimension : 670mm (W) x 400mm (L)

Plug Used:

Direct Built-in wiring

Matte-Finished Surface

Product Features:

- Highest cooking of up to Power 12, reach up to 574°C within 10 minutes
- Hourly electric consumption as low as RM 0.20 per hour*
- Matte-finished surface
- Heat resistence
- Easy-to-clean
- Child Safety Lock

Suit for all cookware materials

Installation fees is NOT included for all the price stated above & price is subject to change without prior notice

PREMIUM

GS388 Tri-Ringz Twin Burner Gas Stove

Model No:SZ-GS388

Retail Price: EM: RM1,899 WM: RM1,699

Triple Ring Burners

Special Wok Design
To reduce heat during cooking

Futex Glass
Heat resistance tempered glass

Highlights:

- Tripe Rings for 4 x times the control
- Has up to 6.4kW heat intensity
- Top-notch brass burner
- Fast ignition technology
- Built-in Flame Failure Device (Auto gas cut-off within 10 seconds)
- Glass Size: 800mm x 460mm
- Heat Resistance Tempered Glass FUTEX
- Battery operated auto-ignition
- Removable burner cap
- Easy to clean
- Safety valve
- Gas type: LPG
- Gas Pressure : 2800 kPa
- Free Standing or Built-in
- Build-in Hole Dimension : 710mm (W) x 400mm (L)

Tri-Ringz Technology | FAST IGNITION | Futex Glass | First in Malaysia | Triple Ring Burners | 6.4kW Heat Intensity | Battery Ignition | Safety Valve | Tempered Glass | Premium Cast Iron | SIRIM Certified

REMARKS: USE ONLY LOW PRESSURE REGULATOR FOR THIS APPLIANCE

Low Pressure Regulator | High Pressure Regulator

CAUTION : Please ensure that the burner cap is placed securely and evenly to prevent any gas leaks and potential fire hazards.

OPERATION : 1) Pressed and hold the knob for 3 – 5 seconds before turning it. 2) After flame ignites, keep pressing the knob for 5 more seconds before releasing it to prevent the flame from going out.

REMARK : When either of the knobs is pressed, both ignition pins will light up, indicating that the gas is ready to ignite. However, the gas supply for each burner is separate, so only the burner that has been turned on will ignite and produce a flame.

Triple Ring For Three Times The Control

1st First in Malaysia

CHOOSE YOUR **GAS HOB**

SENZ SZ-GS388		VS	Unknown Brand	
Triple Ring Burners	Futex Glass		Double Ring Burners	Normal Glass
6.4kW	4 Fire Modes		4.5kW	2 Fire Modes
SIRIM Certified	Within 10 Seconds		No SIRIM Certified	No Auto Gas Cut-Off

FLEXIBLE BASE

Can fit in variety of built-in hole
350-430 mm (W) x 650-750 mm (L)

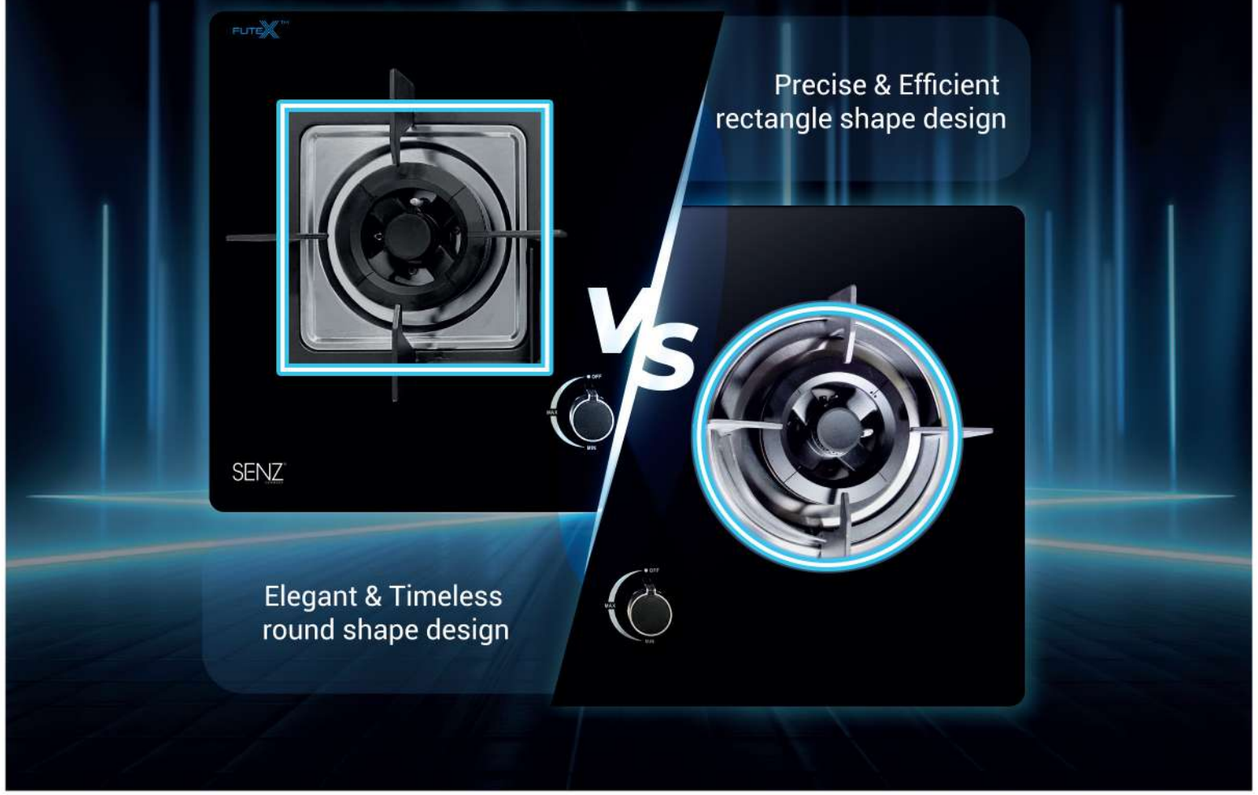

Why Flexible Base?

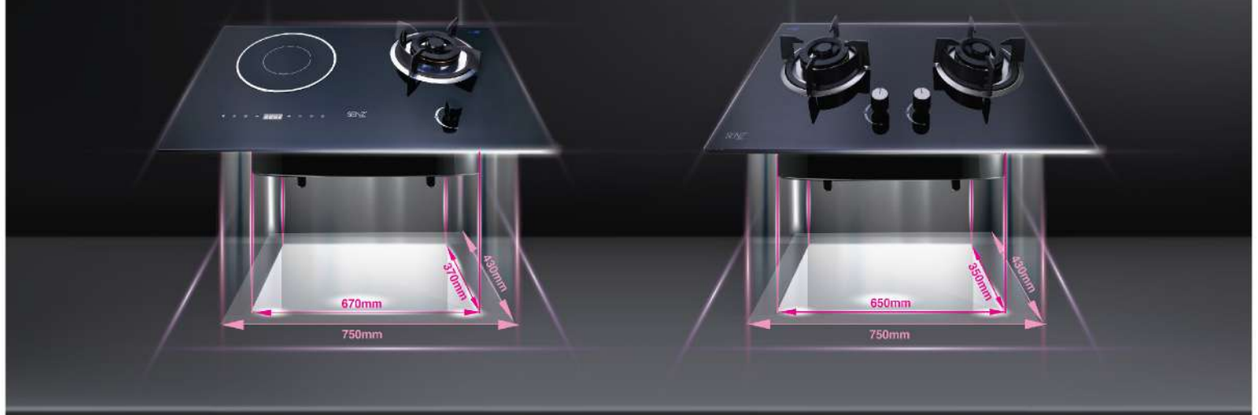

Introducing our latest gas cooker with a flexible base that can be customized to fit a variety of hole sizes. Say goodbye to the hassle of finding a gas stove that fits your existing build-in hole. Our adjustable base provides the perfect solution for customers who are looking to upgrade to a new gas stove but worry about compatibility issues. Experience the convenience and peace of mind knowing that our gas cooker is designed with your needs in mind. Upgrade your kitchen with our versatile gas cooker today!

PREMIUM

QUADRO Flexible Base Sealed Burner Gas Stove

Retail Price: EM: RM1,799 WM: RM1,599

Model No:SZ-GS6852FL

Sealed Burner

Special Wok Design
To reduce heat
during cooking

Futex Glass
Heat resistance
tempered glass

Highlights:

- Flexible Base, can fit in variety of build-in hole
- Sealed burner for easy cleaning
- Has up to 5.2kW Heat Intensity
- Top-notch brass burner
- Fast ignition technology
- Built-in flame failure device (auto gas cut-off within 10 seconds)
- Heat resistance tempered glass FUTEX
- Battery operated auto-ignition
- Removeable burner cap
- Safety valve
- Gas type : LPG
- Gas pressure : 2800 kPa
- Glass Size: 780mm x 460mm
- Free Standing or Built-in
- Build-in Hole Dimension
  - New House : 650mm(W) x 350mm(L)
  - Existing Hole : 650mm-750mm(W) - 350mm-430m(L)

FAST IGNITION

Futex Glass | 5.2kW Power | Battery Ignition | Safety Valve | Tempered Glass | Premium Cast Iron | SIRIM Certified

REMARKS: USE ONLY LOW PRESSURE REGULATOR FOR THIS APPLIANCE

Low Pressure Regulator | High Pressure Regulator

PREMIUM

GS368FL Flexible Base Sealed Burner Gas Stove

Retail Price: EM: RM1,799 WM: RM1,599

Model No:SZ-GS368FL

Exclusive SENZ Logo

Sealed Burner

Special Wok Design
To reduce heat
during cooking

Futex Glass
Heat resistance
tempered glass

Highlights:

- Flexible base, can fit in variety of built-in hole
- Sealed burner for easy cleaning
- Has up to 5.2kW heat intensity
- Top-notch brass burner
- Fast ignition technology
- Built-in flame failure device (Auto gas cut-off within 10 seconds)
- Heat resistance tempered glass FUTEX
- Battery operated auto-ignition
- Removeable burner cap
- Safety valve
- Gas type: LPG
- Gas pressure: 2800kPa
- Glass Size: 780mm x 460mm
- Free Standing or Built-In
- Build-in Hole Dimension
  - New House : 650mm(W) x 350mm(L)
  - Existing Hole : 650mm-750mm(W) - 350mm-430m(L)

FAST IGNITION

Futex Glass | 5.2kW Heat Intensity | Battery Ignition | Safety Valve | Tempered Glass | Premium Cast Iron | SIRIM Certified

REMARKS: USE ONLY LOW PRESSURE REGULATOR FOR THIS APPLIANCE

Low Pressure Regulator | High Pressure Regulator

CAUTION : Please ensure that the burner cap is placed securely and evenly to prevent any gas leaks and potential fire hazards.

OPERATION : 1) Pressed and hold the knob for 3 – 5 seconds before turning it. 2) After flame ignites, keep pressing the knob for 5 more seconds before releasing it to prevent the flame from going out.

REMARK : When either of the knobs is pressed, both ignition pins will light up, indicating that the gas is ready to ignite. However, the gas supply for each burner is separate, so only the burner that has been turned on will ignite and produce a flame.

Installation fees is NOT included for all the price stated above & price is subject to change without prior notice

PREMIUM NEW **GI668** 2 in 1 Hybrid Smart Gas Hob — **Retail Price: EM: RM1,899 WM: RM1,699**

Model No:SZ-GI668

Sealed Burner

Special Wok Design
To reduce heat during cooking

Futex Glass
Heat resistance tempered glass

Induction:

- Touch control system
- Pause function
- Power supply : 220 – 240V – 50Hz
- Standby electric : 2W
- 9 Speeds control at ease
- Cooking range : 2000W
- Timer : 1~240 minutes
- Auto cut-off : 60 minutes
- Child Safety Lock

Gas Stove:

- Flexible Base (can fit in variety of built-in hole)
- Sealed burner for easy cleaning
- Has up to 5.2kW heat intensity
- Top-notch brass burner
- Fast ignition technology
- Built-in flame failure device (Auto gas cut-off within 10 secs)
- Heat resistance tempered glass FUTEX
- Battery operated auto-ignition
- Removeable burner cap
- Safety vavle
- Gas type : LPG
- Gas pressure : 2800 kPa
- Glass Size: 780mm x460mm
- Free Standing or Built-in

- Build-in Hole Dimension
  - New House : 670mm(W) x 370mm(L)
  - Existing Hole : 670mm-750mm(W) - 370mm-430m(L)

Plug Used:

13amp

FAST IGNITION — Futex Glass · 2 in 1 Smart Gas Hob · 5.2kW Power · Battery Ignition · Safety Valve · 8mm Tempered Glass · Child Lock Mode · Auto Cut-off Mode · SIRIM Certified

REMARKS: USE ONLY LOW PRESSURE REGULATOR FOR THIS APPLIANCE

Low Pressure Regulator | High Pressure Regulator

CAUTION : Please ensure that the burner cap is placed securely and evenly to prevent any gas leaks and potential fire hazards.
OPERATION : 1) Pressed and hold the knob for 3 – 5 seconds before turning it. 2) After flame ignites, keep pressing the knob for 5 more seconds before releasing it to prevent the flame from going out.
REMARK : When either of the knobs is pressed, both ignition pins will light up, indicating that the gas is ready to ignite. However, the gas supply for each burner is separate, so only the burner that has been turned on will ignite and produce a flame.

PREMIUM **VRC868i** 2 in 1 Smart Cooker — **Retail Price: EM: RM1,849 WM: RM1,649**

Model No:SZ-VRC868i

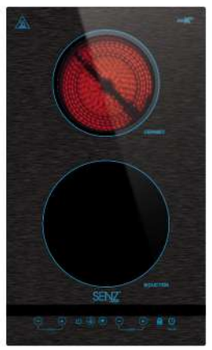

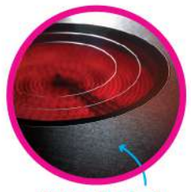

Matte-Finished Surface

Highlights:

- Glass Panel : Matte-finished, Heat resistance ceramic glass FUTEX
- Heating Element : Latest single cooking zone heat technology
- Button Design : Touch control system, LED display
- Glass Size : 510mm x 300mm
- Function : Induction + Hi-Light Cooker, cook, stir-fry, steam, stew, barbeque, grille, simmer, roast
- Power Supply : 220 – 240V – 50 / 60Hz
- Standby Electricity : 2W
- Cooking Zone : 2
- Cooking Range : Upper: 1600W, Lower: 1800W, Total Power Sharing: 2800W
- Timer : 99 minutes
- Auto-Cut Off : 120 minutes
- Electronic overheating protection
- Free Standing or Built-in
- Built-in Hole Dimension: 480mm(W) x 280mm(L)

Product Features:

- Vertical design suitable for island or open kitchen concept
- Power sharing ot save more energy
- Hourly electric consimption as low as RM 0.20 per hour
- Matte-finished surface
- Heat resistance
- Easy to clean
- Child Safely Lock

Plug Used:

13amp

Suit for all cookware materials

Claypot · Ceramic · Glass · Copper · Cast Iron · Stainless Steel · Normal Steel · Aluminium Non-stick

Installation fees is NOT included for all the price stated above & price is subject to change without prior notice

PREMIUM NEW

ROZEN Flexible Base Sealed Burner Gas Stove with Rose Gold Frame

Retail Price: EM: RM1,899 WM: RM1,699

Model No:SZ-GS698FL

Sealed Burner
for Easy Cleaning

Special Wok Design
to Reduce Heat
during Cooking

Nano Coating

Futex Glass
Heat Resistance
Tempered Glass

Special Rose Gold
Frame Design

Highlights:

- Flexible base, can fit in variety of built-in hole
- Sealed burner for easy cleaning
- Has up to 5.2kW heat intensity
- Top-notch brass burner
- Fast ignition technology
- Built-in flame failure device (Auto gas cut-off within 10 seconds)
- Heat resistance tempered glass FUTEX
- Battery operated auto-ignition
- Removeable burner cap
- Safety valve
- Gas type: LPG
- Gas pressure: 2800kPa
- Glass size: 780mm x 460mm
- Free Standing or Build-in

Build-in Hole Dimension
For New House :650mm(W) x 350mm(L)
For Existing Hole :650-750mm(W) x 350-430mm(L)

FAST IGNITION

Futex Glass · 5.2kW Heat Intensity · Battery Ignition · Safety Valve · Tempered Glass · Premium Cast Iron · SIRIM Certified

CAUTION : Please ensure that the burner cap is placed securely and evenly to prevent any gas leaks and potential fire hazards.
OPERATION : 1) Pressed and hold the knob for 3 – 5 seconds before turning it. 2) After flame ignites, keep pressing the knob for 5 more seconds before releasing it to prevent the flame from going out.
REMARK : When either of the knobs is pressed, both ignition pins will light up, indicating that the gas is ready to ignite. However, the gas supply for each burner is separate, so only the burner that has been turned on will ignite and produce a flame.

REMARKS: USE ONLY LOW PRESSURE REGULATOR FOR THIS APPLIANCE

Low Pressure Regulator | High Pressure Regulator

PREMIUM

All-in-One Flexi Steam Pro 34L

Retail Price: EM: RM3,949 WM: RM3,749

Model No:SZ-SOV3412

Highlights:

- Capacity 34 litres
- Power Consumption: 230V~50Hz
- Operating Frequency : 2,000W
- Auto Menu
- Timer and temperature function
- Bake, Grill, Steam and Air-fryer
- Fermentation Mode
- Child Safety Lock

Accessories Included:

- Baking Tray x1
- Drip Tray x1

Plug Used:

13amp

Auto Menu
Function

34L
Capacity

External Water
Container

Steam Mode

Fish Function · Egg Function · Seafood Function · Pastry Function · Meat Function · Vegetable Function · Ferment Mode · Defrost

Bake Mode

Top + Back Heating plus Fan · Top plus Back Heating · Back Heating plus Fan · Top Heating

Remarks: There will be a variance of ±20°C from the temperature set during operation

***Purchase with Purchase (PWP) is applicable with purchase of MultiHood + MultiCooker package only**

WM: RM3,249*
EM: RM3,449*
PWP

Installation fees is NOT included for all the price stated above & price is subject to change without prior notice

PREMIUM

OV759-9F Push Knob Digital MultiOven

Retail Price: EM: RM2,849 WM: RM2,649

Model No:SZ-OV759-9F

Highlights:

- 9 Cooking Functions
- Capacity: 75 Litres
- Operation Frequency: 2000W
- Interior Material: Iron Coating Enamel
- With Rotisseries Baking Mode
- Mechanical Push Knob Design + Electronic
- Cavity Cooling System
- 24hour Digital Time Display
- Removable Door for Easy Cleaning
- Triple Glazed Removable Tempered Glass for Easy Cleaning
- Child Safety Lock

Accessories Included:

- Sliding Ware x 1
- Drip Tray x 1

Plug Used:

Direct Built-in wiring

Push Knob + Electronic Design

Removable Inner Rack for Easy Cleaning

Retractable Track

Lighting · Defrost · Traditional Baking · Convection Baking · Top Heating · Pizza Function · Pure Convection Baking · Rotisserie · Fan Assist Rotisserie

PREMIUM

MW2510 Fully Digital Built-in Microwave Oven

Retail Price: EM: RM2,749 WM: RM2,549

Model No:SZ-MW2510

Highlights:

- Capacity : 25 Litres
- Power Consumption : 240V ~ 50Hz, 1400W
- Operating Frequency : 2,450MHz
- 24 hour digital time display
- Child Safety Lock
- Auto Weight Defrost
- Auto Menu
- Disinfection Mode

Accessories Included:

- Grill Rack x1
- Glass tray x1
- Roller Ring x1

Plug Used:

13amp

Dimension:

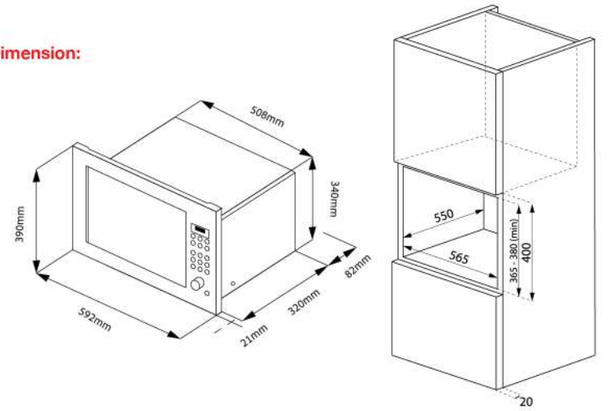

Light Waves · 24 Hour Digital Clock · Child Safety Lock · Single Button Heating · Microwave Heating · Auto Weight Defrost · Auto Menu · Timer · Disinfection Mode · Combination Cooking

Remarks: There will be a variance of ±20°C from the temperature set during operation

***Purchase with Purchase (PWP) is applicable with purchase of MultiHood + MultiCooker package only**

WM: RM2,049*
EM: RM2,249*
PWP

Installation fees is NOT included for all the price stated above & price is subject to change without prior notice

PREMIUM NEW

BRILLO Black Matt Surface Designer Pendant Hood with Remote Control

Retail Price: EM: RM2,199 WM: RM1,999

Model No:SZ-ICH188

With Remote Control

Highlights:

- Latest pendant hood design
- Modern black matt surface design
- Modern and stylish touch control design
- Remote control for easy operation
- Suction power: 1200 m3/h
- Recirculation option only
- Washable Buffer Filter
- LED lights
- Recommended installation height from gas or electric hob:
- 750mm or according to your ceiling height

Plug Used: 13amp

Dimension:

Installation fees is NOT included for all the price stated above & price is subject to change without prior notice

PREMIUM NEW

SERENO Black Glass Designer Pendant Hood - 750mm with Remote Control

Retail Price: EM: RM2,699 WM: RM2,499

Model No:SZ-ICH608

With Remote Control

Highlights:

- Latest pendant hood design
- Modern black tempered glass design which makes it very easy to clean
- Modern and stylish touch control design
- Remote control for easy operation
- Suction power: 1200 m3/h
- Recirculation option only
- Washable Buffer Filter
- LED lights
- Recommended installation height from gas or electric hob:
- 750mm or according to your ceiling height

Plug Used: 13amp

Dimension:

Installation fees is NOT included for all the price stated above & price is subject to change without prior notice

PREMIUM NEW **VENTE** Black Glass Designer Pendant Hood with Remote Control **Retail Price: EM: RM2,899 WM: RM2,699**

Model No:SZ-ICH328

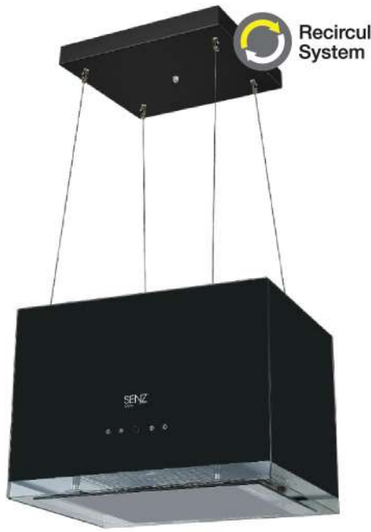

With Remote Control

Highlights:

- Latest pendant hood design
- Modern black tempered glass design which makes it very easy to clean
- Modern and stylish touch control design
- Remote control for easy operation
- Suction power: 1200 m3/h
- Recirculation option only
- Washable Buffer Filter
- LED lights
- Recommended installation height from gas or electric hob:
- 750mm or according to your ceiling height

Plug Used: 13amp

Dimension:

Installation fees is NOT included for all the price stated above & price is subject to change without prior notice

PREMIUM Collection

SENZ ADEL(CH9560DC)

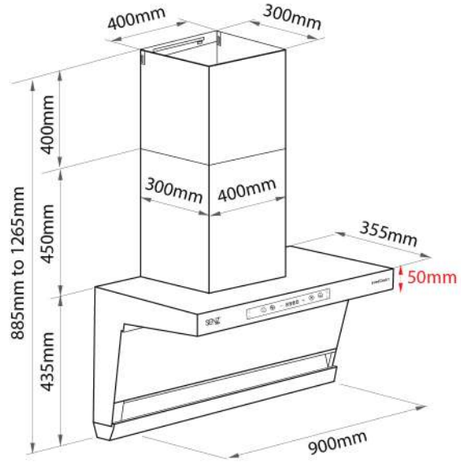

SENZ VISTA(CH9670DC)

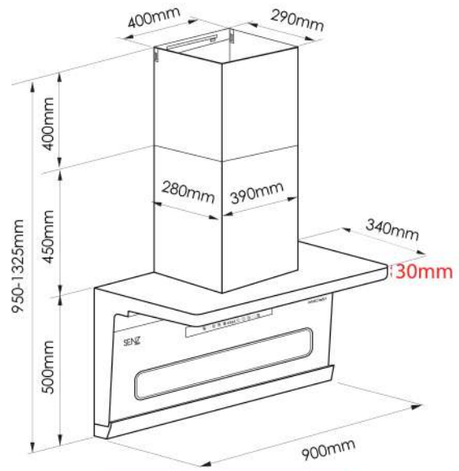

SENZ STELLA DC(CH9166DC)

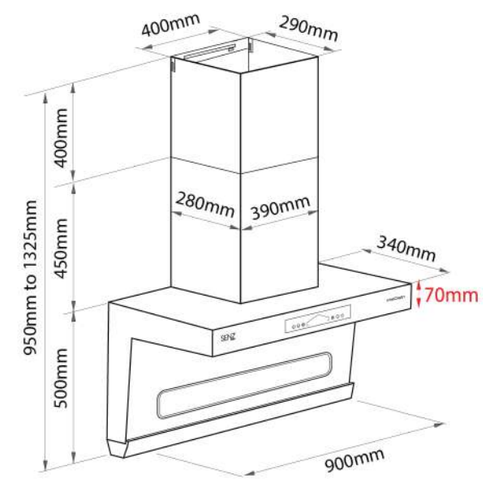

SENZ CH9388AC

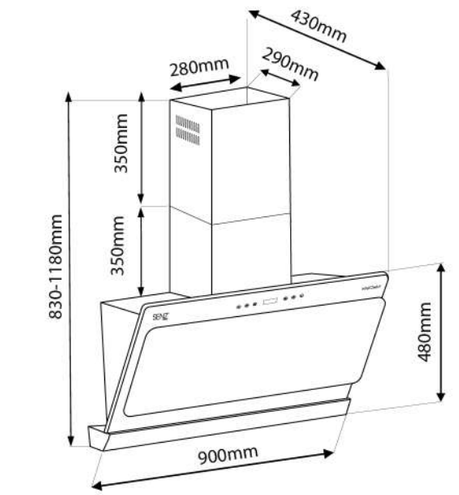

SENZ BONITA(CH336iAC)

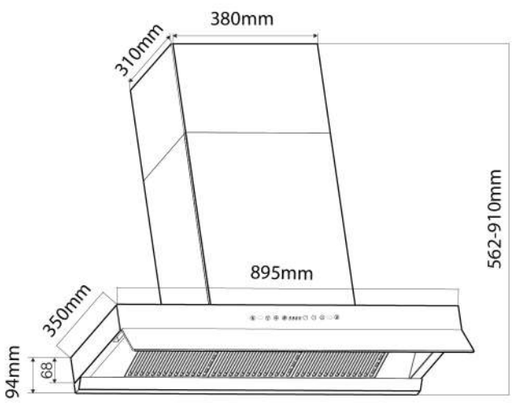

SENZ VISTO(CH9130AC)

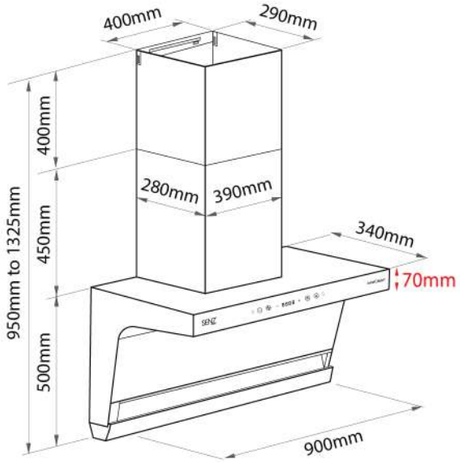

PREMIUM Collection

SENZ CH1288RC

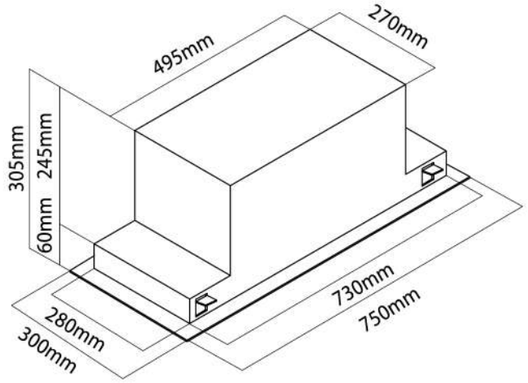

SENZ BARRISA (CH9832AC)

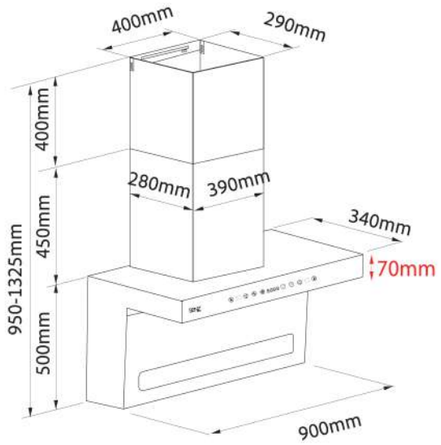

SENZ LEON (CH7070DC)

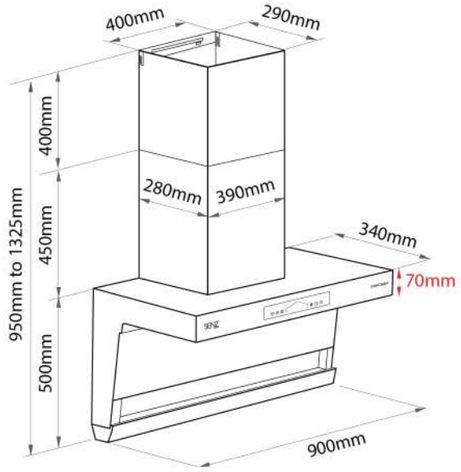

SENZ VERA (CH2268DC)

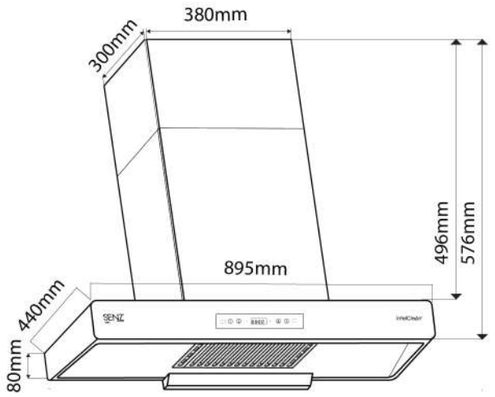

SENZ SENSILLA (CH8822AC)

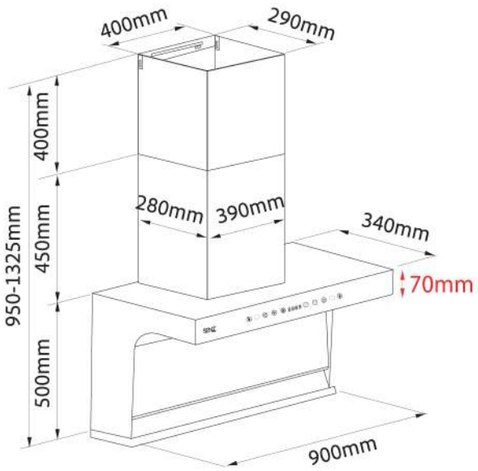

SENZ BRILLO (ICH188)

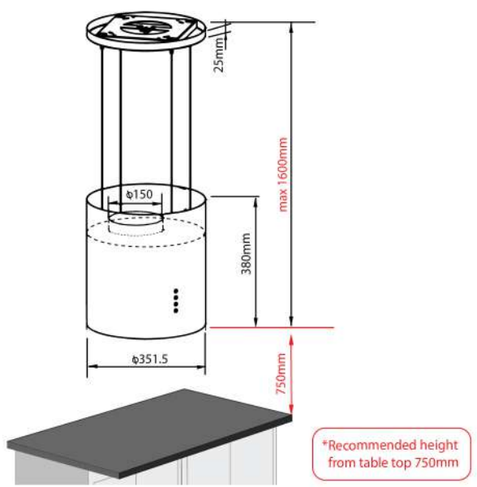

PREMIUM Collection

SENZ SERENO (ICH608)

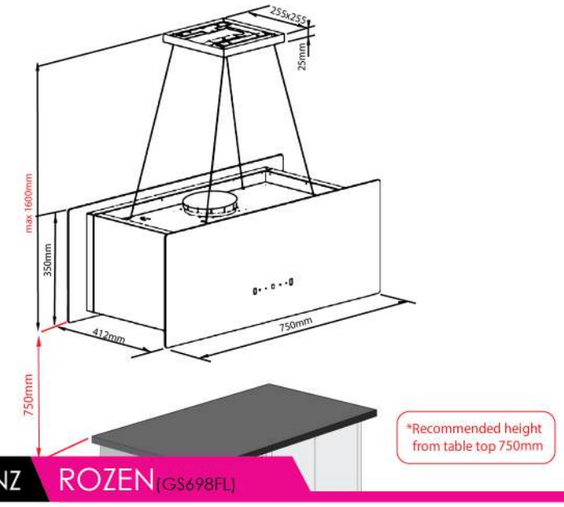

SENZ VENTE (ICH328)

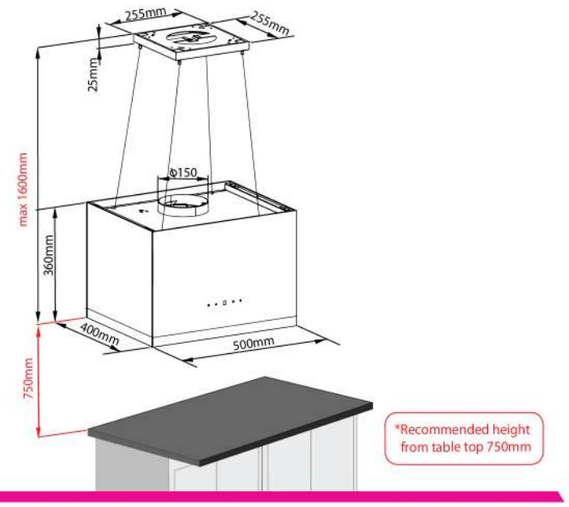

SENZ ROZEN (GS698FL)

For Existing Hole
Dimension

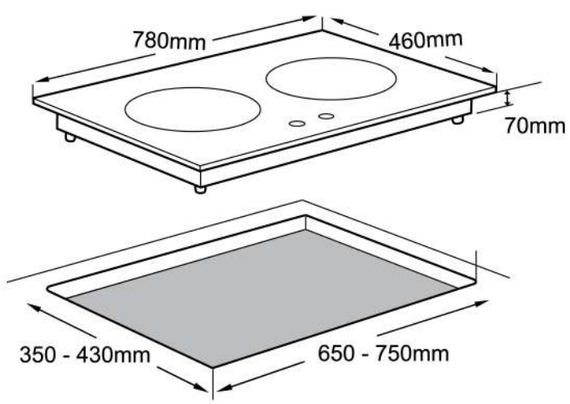

For New House
Dimension

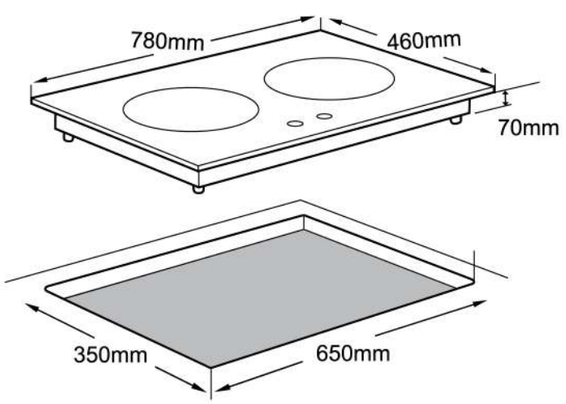

SENZ QUADRO (GS6852FL)

For Existing Hole
Dimension

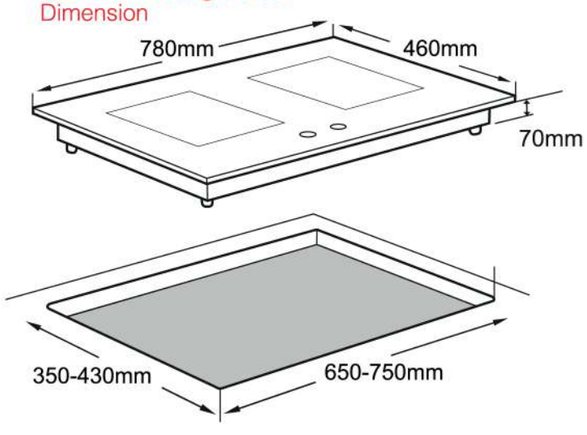

For New House
Dimension

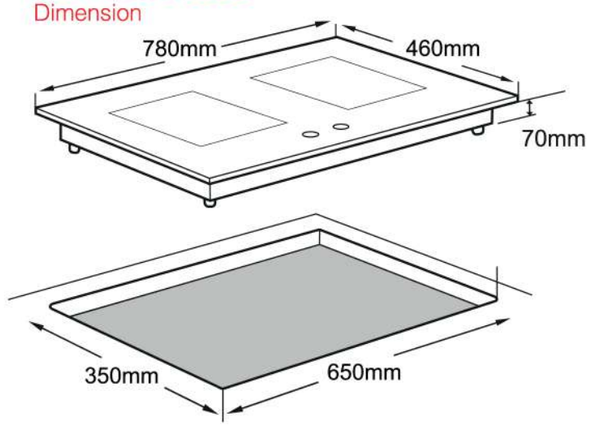

PREMIUM
Collection

SENZ GS368FL

For Existing Hole
Dimension

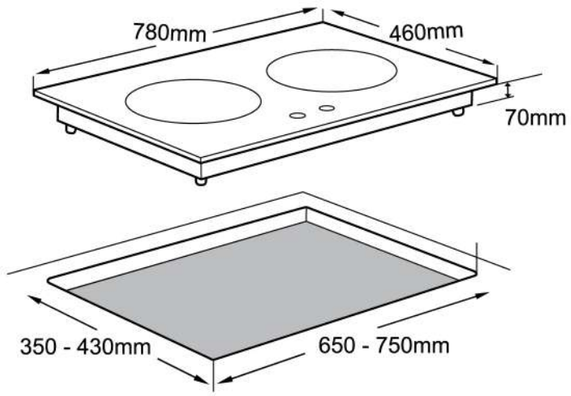

For New House
Dimension

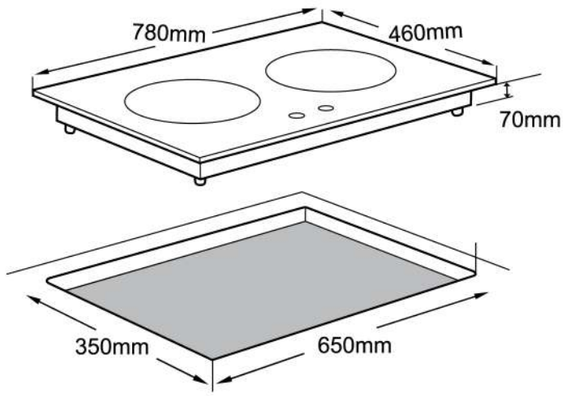

SENZ GI668

For Existing Hole
Dimension

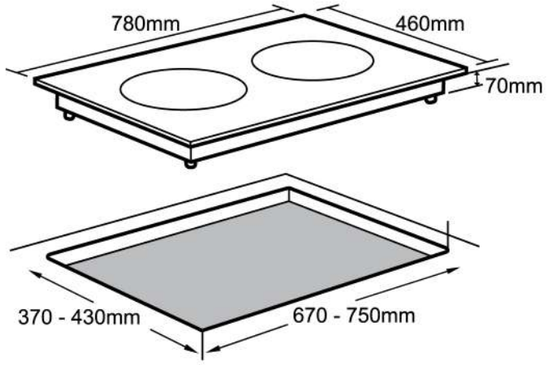

For New House
Dimension

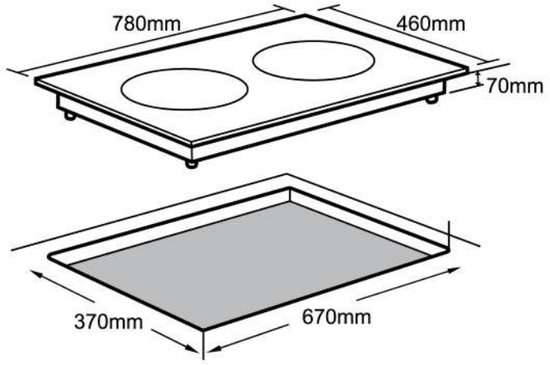

SENZ GS388

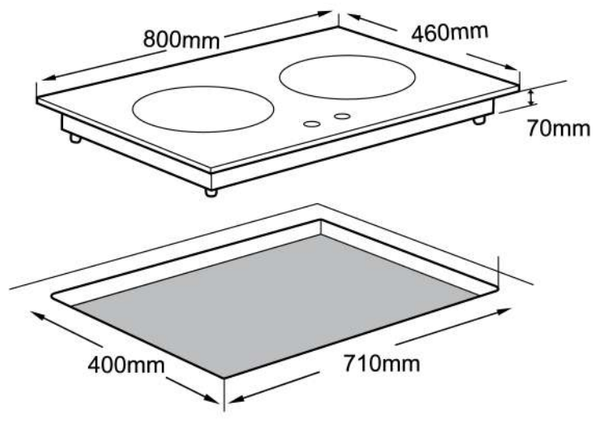

SENZ VRC868i

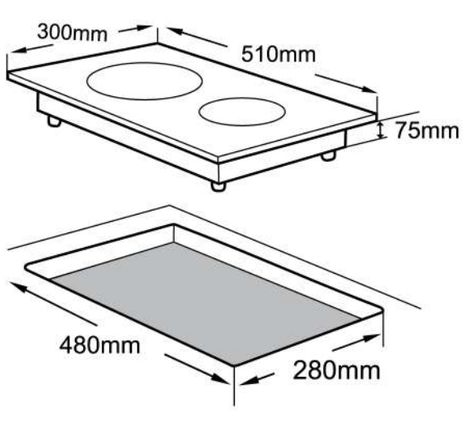

PREMIUM
Collection

SENZ RI3200i

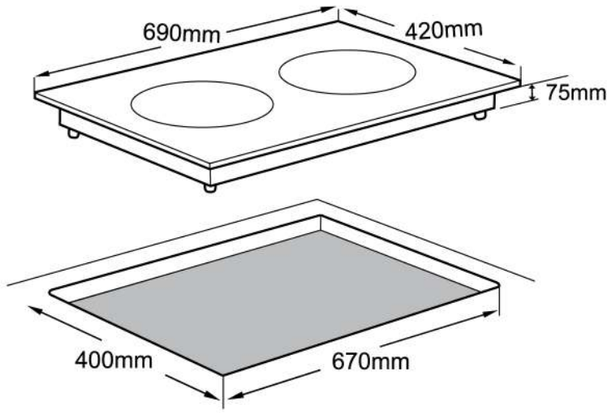

SENZ RC220FT

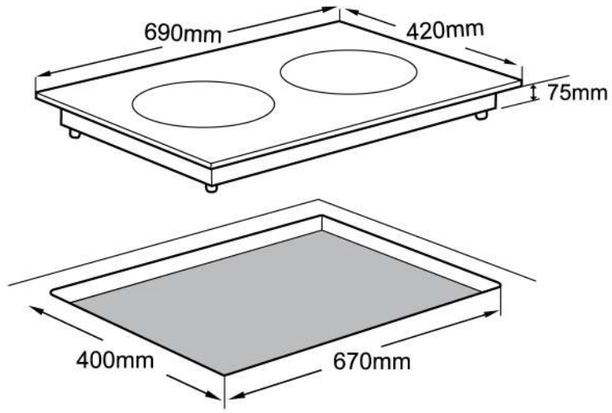

SENZ FlexiSteamPro(SOV3412)

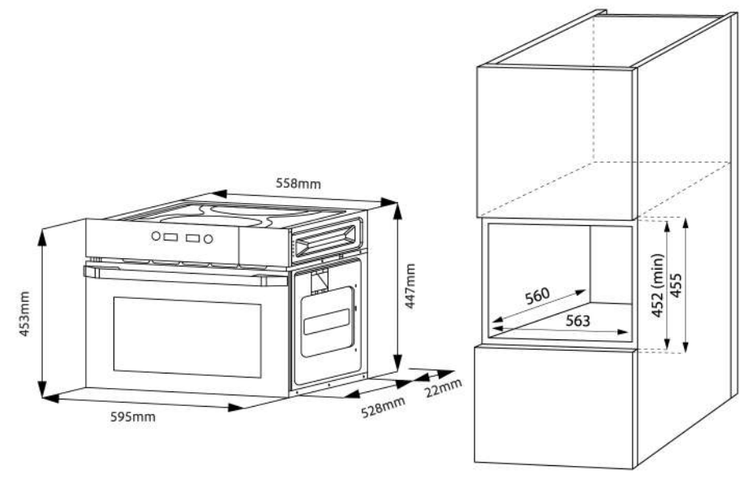

SENZ OV759-9F

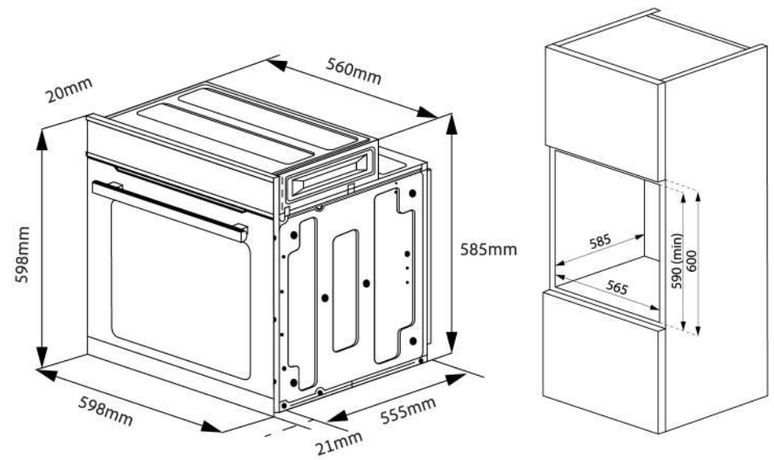

CLASSIC

Collection

CLASSIC NEW — HERMOSA Ultra Slim Heat Pro intelClean Cooker Hood

Retail Price: EM: RM2,599 WM: RM2,399

Model No:SZ-CH8380AC

Highlights:

- Sleek and modern ultra slim hood with black tempered glass which makes it very easy to clean
- Suction power: 1950 m3/h (with turbo boost)
- Heat auto cleaning function
- Motion Sensor Technology
- Exhaust / recirculation option
- Cold plate glass is design to condense the grease and vapor, preventing them from escaping and directing them towards the oil cup got easy cleaning
- Metal oil cup which is 5 times bigger than the traditional size
- Full LED light panel
- Recommended installation height from gas and electric hob: 350mm ~ 400mm
- Stainless steel wall cap
- Chimney Cover:
  -1st Glass Chimney
  -2nd Metal Chimney
- 3 meters aluminum hose (hose dimension: 180mm (7"))
- Coring dimension at wall for installing wall cap: 150mm (6")
- Included: a connector will be provided to connect 180mm to 150mm for easy installation

Optional Accessories:

- Charcoal filter
- Second pcs chimney cover

Plug Used:

13amp

Motion Sensor Technology

Cold Plate Glass (Easy Cleaning)

Glass Chimney Cover

Heat Auto Cleaning

CLASSIC NEW — ENZO intelSync Cooker Hood with Nano Coating

Retail Price: EM: RM1,799 WM: RM1,599

Model No:SZ-CH8360AC

Highlights:

- Modern angled design hood with Nano Coating Glass
- Suction power: 1800 m3/h
- Heat auto cleaning function
- Motion Sensor Technology
- Exhaust / recirculation option
- Metal oil cup which is 5 times bigger than traditional size
- LED light
- Recommended installation height from electric hob: 400mm ~ 500mm
- Recommended installation height from gas hob: 300mm ~ 450mm
- 2 pcs Metal Chimney Cover
- Stainless steel wall cap
- 3 meters aluminum hose (hose dimension: 180mm (7"))
- Coring dimension at wall for installing wall cap: 150mm (6")

Included: a connector will be provided to connect 180mm to 150mm for easy installation

Optional Accessories:

- Charcoal filter

Plug Used:

13amp

Motion Sensor Technology

Removable Metal Filter

Invisible Button

Nano Coating Glass

AI intelSync Technology

Heat Auto Cleaning

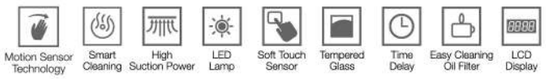

Installation fees is NOT included for all the price stated above & price is subject to change without prior notice

CLASSIC NEW — RUBY intelSync Twin Burner Gas Stove with Nano Coating

Retail Price: EM: RM1,099 WM: RM899

Model No:SZ-GS980FL

Special Wok Design
To reduce heat during cooking

Nano Coating

Futex Glass
Heat resistance tempered glass

Highlights:

- Equip with latest intelSync Technology (This function ONLY available when you pair with Enzo Cooker Hood)
- Flexible base, can fit in variety of build-in hole
- Has up to 5.0kW heat intensity
- Glass with Nano Coating for easy cleaning
- Top-notch brass burner
- Fast ignition technology
- Build-in Flame Failure Device (Auto gas cut-off within 10 seconds)
- Heat Resistance Tempered Glass FUTEX
- Battery operated auto-ignition
- Removable burner cap
- Safety valve
- Gas Type: LPG
- Gas Pressure: 2800 kPA
- Glass Size: 780mm x 460mm
- Free Standing or Build-in
- Build-in Hole Dimension
  For New House :650mm(W) x 350mm(L)
  For Existing Hole :650-750mm(W) x 350-430mm(L)

CAUTION : Please ensure that the burner cap is placed securely and evenly to prevent any gas leaks and potential fire hazards.

OPERATION : 1) Pressed and hold the knob for 3 – 5 seconds before turning it. 2) After flame ignites, keep pressing the knob for 5 more seconds before releasing it to prevent the flame from going out.

REMARK : When either of the knobs is pressed, both ignition pins will light up, indicating that the gas is ready to ignite. However, the gas supply for each burner is separate, so only the burner that has been turned on will ignite and produce a flame.

CLASSIC NEW — AMBER intelSync Twin Burner Gas Stove with Nano Coating

Retail Price: EM: RM1,099 WM: RM899

Model No:SZ-GS6890FL

Special Wok Design
To reduce heat during cooking

Nano Coating

Futex Glass
Heat resistance tempered glass

Highlights:

- Equip with latest intelSync Technology (This function ONLY available when you pair with Enzo Cooker Hood)
- Flexible base, can fit in variety of build-in hole
- Has up to 5.0kW heat intensity
- Glass with Nano Coating for easy cleaning
- Top-notch brass burner
- Fast ignition technology
- Build-in Flame Failure Device (Auto gas cut-off within 10 seconds)
- Heat Resistance Tempered Glass FUTEX
- Battery operated auto-ignition
- Removable burner cap
- Safety valve
- Gas Type: LPG
- Gas Pressure: 2800 kPA
- Free Standing or Build-in
- Glass Size: 780mm x 460mm
- Build-in Hole Dimension
  For New House :650mm(W) x 350mm(L)
  For Existing Hole :650-750mm(W) x 350-430mm(L)

CAUTION : Please ensure that the burner cap is placed securely and evenly to prevent any gas leaks and potential fire hazards.

OPERATION : 1) Pressed and hold the knob for 3 – 5 seconds before turning it. 2) After flame ignites, keep pressing the knob for 5 more seconds before releasing it to prevent the flame from going out.

REMARK : When either of the knobs is pressed, both ignition pins will light up, indicating that the gas is ready to ignite. However, the gas supply for each burner is separate, so only the burner that has been turned on will ignite and produce a flame.

Installation fees is NOT included for all the price stated above & price is subject to change without prior notice

CLASSIC NEW — GS202 Table Top Spiral Flame Gas Stove with Safety Valve

Retail Price: EM: RM549 WM: RM499

Model No:SZ-GS202

Spiral Flame
Burner Design

Safety Valve
Prevent an explosion when unlit within 10 seconds

Futex Glass
Heat Resistance Tempered Glass

Highlights:

- Portable Tabletop Gas Stove
- Safety Valve
- Built-in Flame Failure Device (auto gas cut-off within 10 seconds)
- Has up to 4.5kW heat intensity
- Product Dimension: 710mm x 410mm x 178mm
- Heat Resistance Tempered Glass FUTEX
- Removeable Burner Cap
- Gas Type: LPG
- Gas Pressure: 2800 kPA

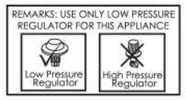

CAUTION : Please ensure that the burner cap is placed securely and evenly to prevent any gas leaks and potential fire hazards.
OPERATION : 1) Pressed and hold the knob for 3 – 5 seconds before turning it. 2) After flame ignites, keep pressing the knob for 5 more seconds before releasing it to prevent the flame from going out.

CLASSIC NEW — GS303 Table Top Linear Flame Gas Stove with Safety Valve

Retail Price: EM: RM549 WM: RM499

Model No:SZ-GS303

Linear Flame
Burner Design

Safety Valve
Prevent an explosion when unlit within 10 seconds

Futex Glass
Heat Resistance Tempered Glass

Highlights:

- Portable Tabletop Gas Stove
- Safety Valve
- Built-in Flame Failure Device (auto gas cut-off within 10 seconds)
- Has up to 4.5kW heat intensity
- Product Dimension: 710mm x 410mm x 178mm
- Heat Resistance Tempered Glass FUTEX
- Removeable Burner Cap
- Gas Type: LPG
- Gas Pressure: 2800 kPA

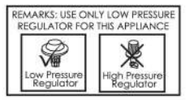

CAUTION : Please ensure that the burner cap is placed securely and evenly to prevent any gas leaks and potential fire hazards.
OPERATION : 1) Pressed and hold the knob for 3 – 5 seconds before turning it. 2) After flame ignites, keep pressing the knob for 5 more seconds before releasing it to prevent the flame from going out.

Installation fees is NOT included for all the price stated above & price is subject to change without prior notice

CLASSIC NEW — SZ-OV7529-9F Digital MultiOven

Retail Price: EM: RM2,199 WM: RM1,999

Model No:SZ-OV7529-9F

Highlights:

- 9 Cooking Functions
- Capacity: 72 Litres
- Operation Frequency: 2800W
- Interior Material: Iron Coating Enamel
- Knob Design + Electronic
- 24hour Digital Time Display
- Removable Door for Easy Cleaning
- Triple Glazed Removable Tempered Glass for Easy Cleaning

Accessories Included:

- Baking Tray x 1
- Wire Rack x 1

Plug Used:

Direct Built-in wiring

Knob + Electronic Design

Removable Inner Rack for Easy Cleaning

CLASSIC NEW — SZ-MW259 Fully Digital Built-in Microwave Oven

Retail Price: EM: RM1,599 WM: RM1,399

Model No:SZ-MW259

Highlights:

- Capacity : 25 Litres
- Power Consumption : 240V ~ 50Hz, 1320W
- Operating Frequency : 2,450MHz
- 24 hour digital time display
- Defrost
- Auto Menu
- Child Safety Lock

Accessories Included:

- Grill Rack x1
- Glass tray x1
- Roller Ring x1

Plug Used:

13amp

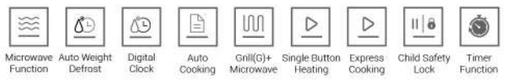

Installation fees is NOT included for all the price stated above & price is subject to change without prior notice

CLASSIC Collection

SENZ HERMOSA (CH8380AC)

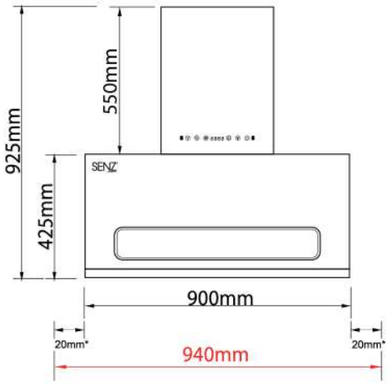

*Gap for dismantle of glass panel

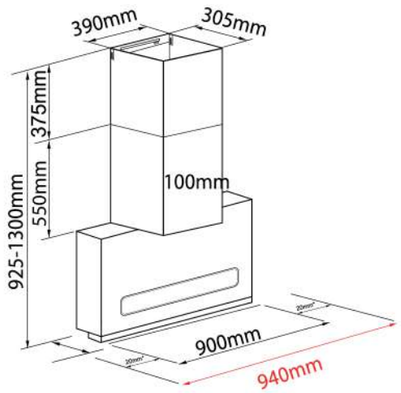

*Gap for dismantle of glass panel

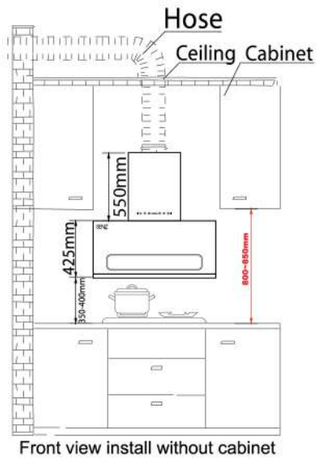

Front view install without cabinet

SENZ ENZO (CH8360AC)

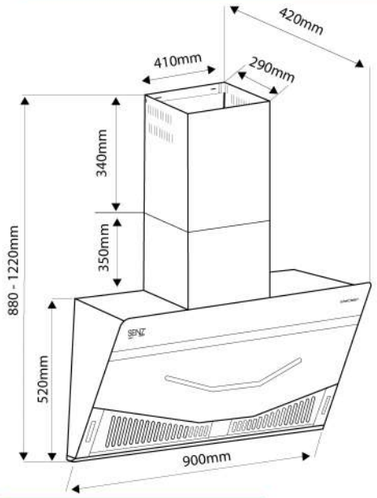

SENZ GS202

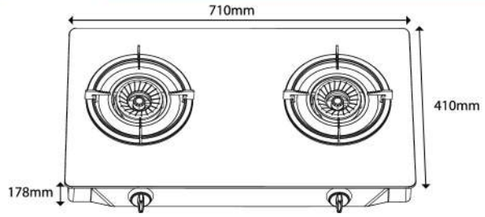

SENZ GS303

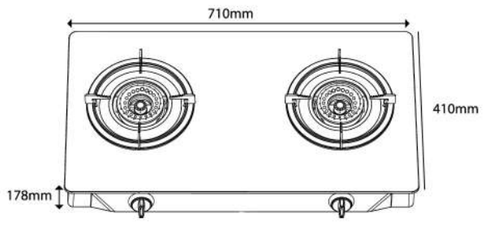

SENZ RUBY (GS980FL)

For Existing Hole
Dimension

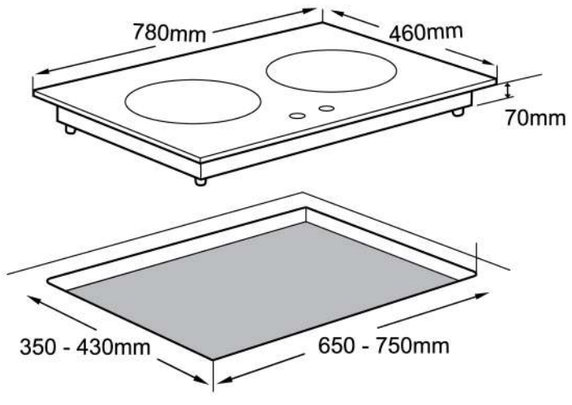

For New House
Dimension

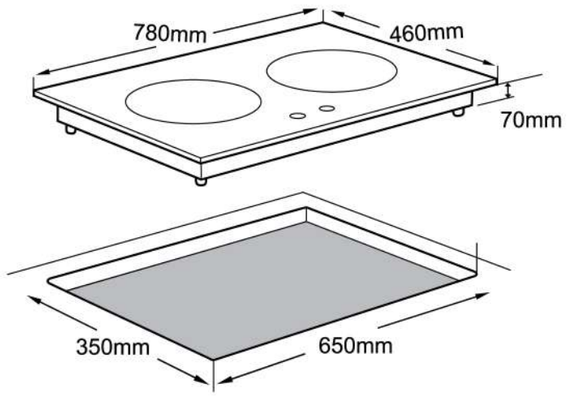

CLASSIC Collection

SENZ AMBER (GS6890FL)

For Existing Hole
Dimension

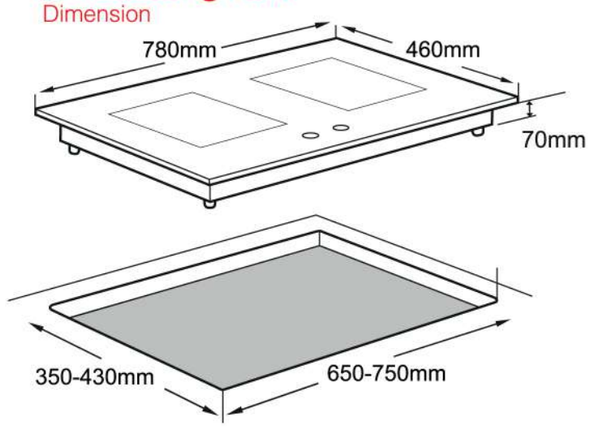

For New House
Dimension

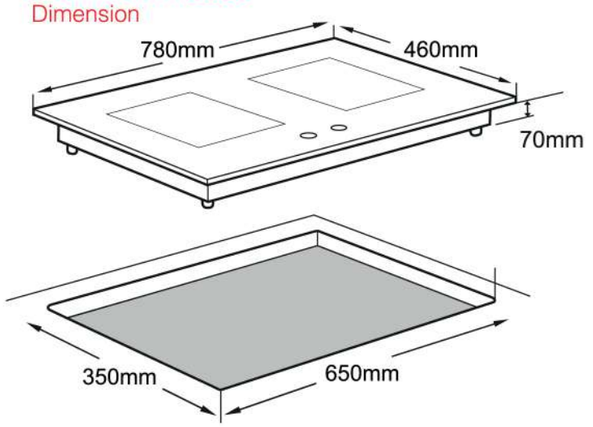

SENZ OV7529

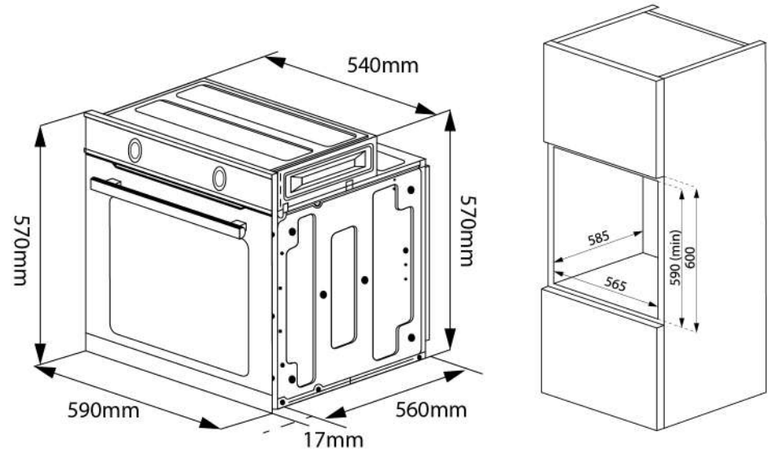

SENZ MW259

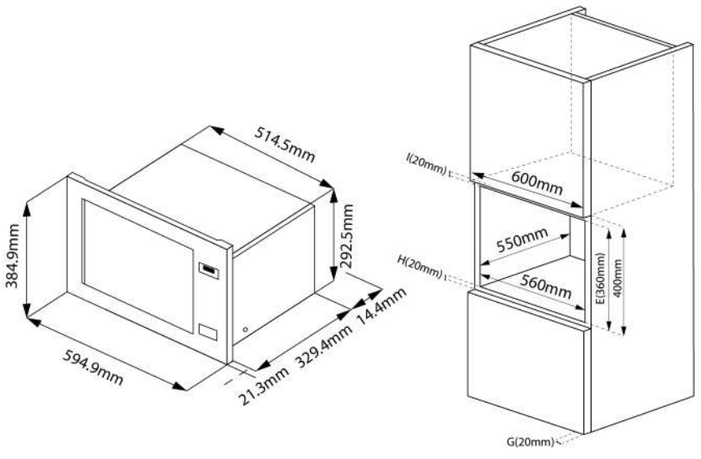

Ducting Hood

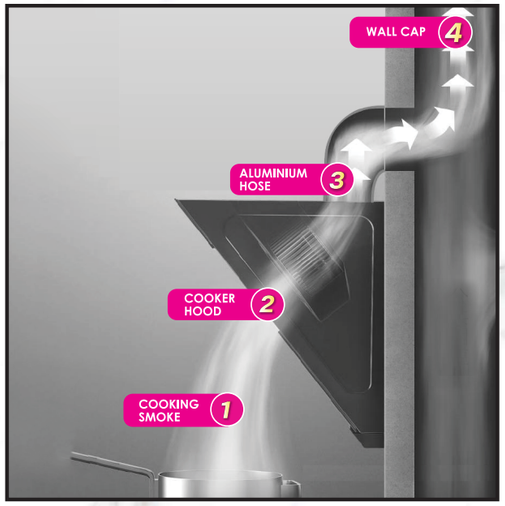

If you can make a coring hole in your kitchen wall, we will suggest you choose to **open hole to install aluminium hose** for extracting grease from your house

Ductless Hood

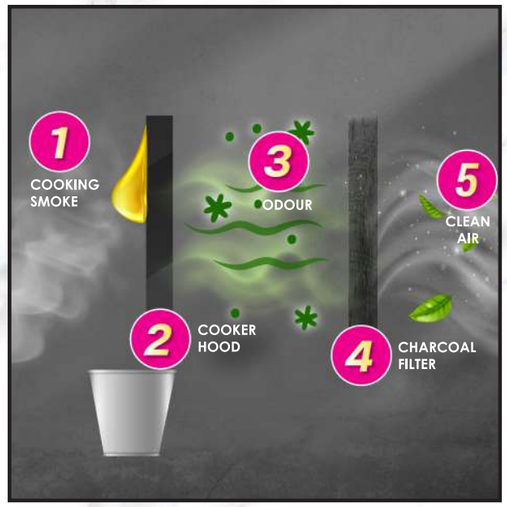

If you not able to make a coring hole in your kitchen wall, you'll need to install the hood as **recirculation system**. It consists of **charcoal filter** that function to **filter the odour and release clean air back in your house.**

WHEN INSTALLING A RECIRCULATING HOOD

note to prevent cabinet door vibrations while operating the hood

To ensure that you have enough ventilation in your cabinet to allow clean air to flow

Suggestion 1:
Open a ventilation hole on your cabinet door.

Suggestion 2:
Open a hole at inside and the top of your kitchen cabinet.

SPECIAL ACCESSORIES :

HONEYCOMB CHARCOAL FILTER

Compatible for all SENZ hood model including ducting hood

(except model: SZ-CH9388AC, SZ-CH1288RC, SZ-CH6860AC)

****Install the honeycomb charcoal filter above the air outlet of your cooker hood**

RECOMMENDED HOOD INSTALLATION HEIGHT

1 ANGLED/HERMOSA/ZAFFIRO COOKER HOOD DESIGN

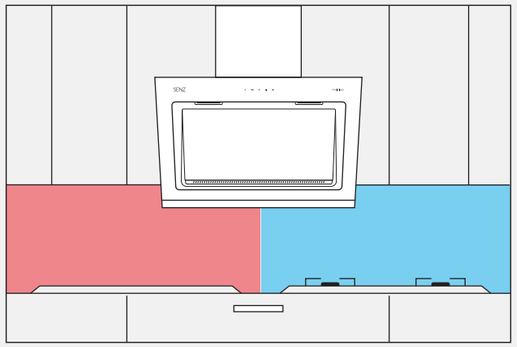

- Angled Cooker Hood with Electric Stove **at least 300 - 450mm**
- Angled Cooker Hood with Gas Stove **at least 400 - 500mm**

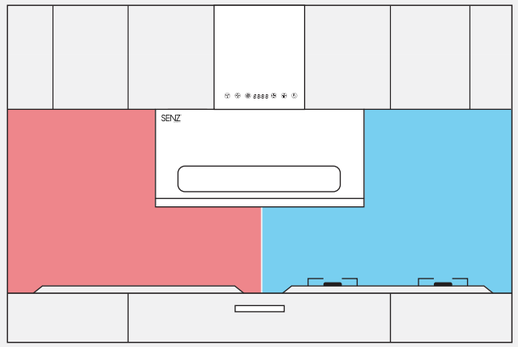

- Hermosa/ Zaffiro Cooker Hood with Electric Stove **at least 350 - 400mm**
- Hermosa/ Zaffiro Cooker Hood with Gas Stove **at least 350 - 400mm**

2 CHIMNEY/L SHAPE COOKER HOOD DESIGN

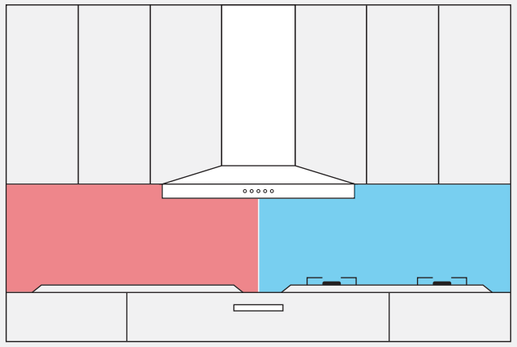

- Chimney Cooker Hood with Electric Stove **at least 600mm**
- Chimney Cooker Hood with Gas Stove **at least 600mm**

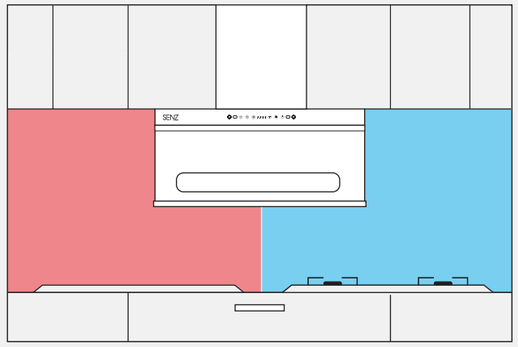

- L SHAPE Cooker Hood with Electric Stove **at least 300 - 450mm**
- L SHAPE Cooker Hood with Gas Stove **at least 400 - 500mm**

3 INVISIBLE COOKER HOOD DESIGN

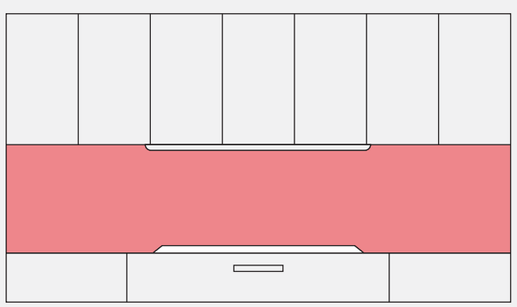

Invisible Cooker Hood with Electric Stove
at least 600mm

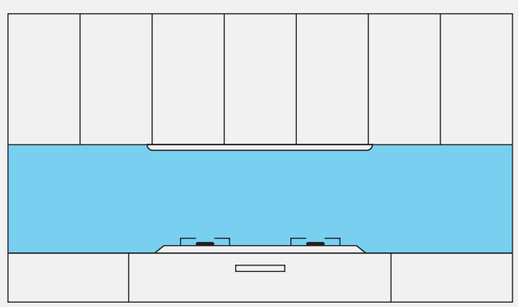

Invisible Cooker Hood with Gas Stove
at least 600mm

GAS HOB INSTALLATION SAFETY GUIDE

1 GAS HOB INSTALLED WITHIN A CABINET

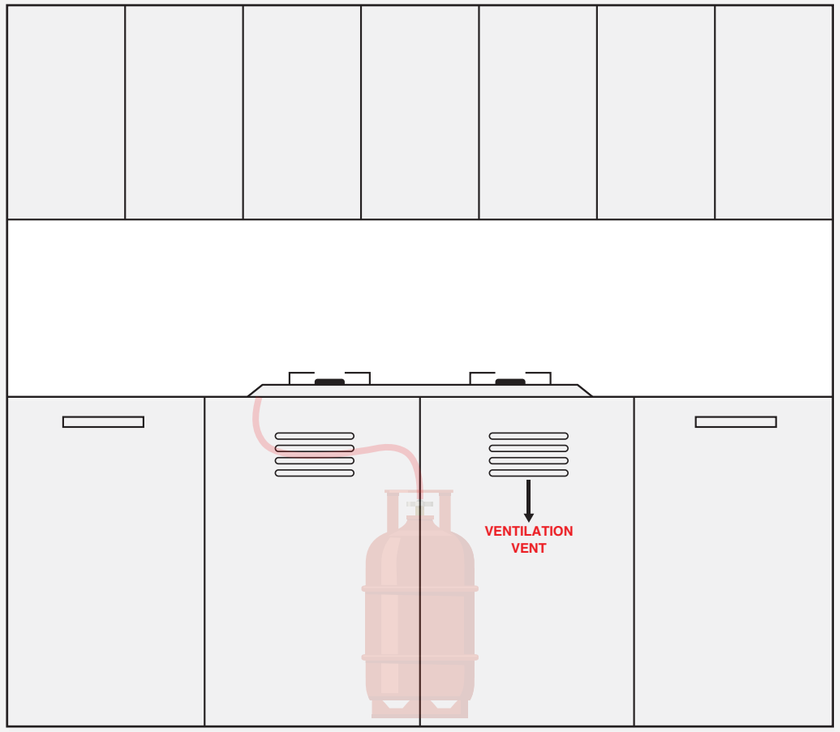

When installing a gas stove into a built-in cabinet, **MAKE SURE** there is sufficient space for proper ventilation within the cabinet to prevent any potential hazards. It is highly recommended to install a ventilation vent on the cabinet door for added safety.

2 USE ONLY LOW PRESSURE REGULATOR (LPG)

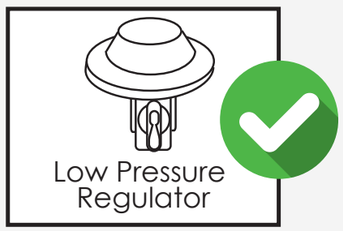

3 DO NOT ADJUST THE POSITION OF GAS CONNECTOR

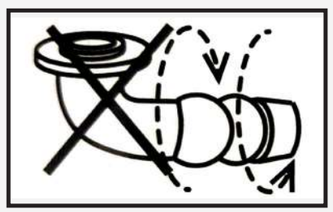

ANY ATTEMPT TO ADJUST IT MAY CAUSE THE GAS CONNECTOR TO BREAK / LOOSEN AND MAY RESULT IN GAS LEAKING!!

WE ARE NOT HELD RESPONSIBLE FOR ANY ACCIDENT IF THIS HAS BEEN ADJUSTED.
PLEASE CONTACT US **03-8052 1011**
SHOULD YOU NEED TO ADJUST THE POSITION.

Customer satisfaction is SENZ's No.1 priority!

Here's what some happy customers are saying about SENZ products!

SENZ® GERMANY
COOKING IN STYLE

Roszilah Embong
Kajang, Selangor

★★★★★

I have been using the Senz Double Ceramic Multicooker for 12 years and it still functions well. It's worth it and makes my family happy. The best senz product quality and no.1. to those who choose a modern and up-to-date lifestyle, senz products are the right choice.

Charlie Chan
Iskandar Puteri, Johor

★★★★★

I'm very happy and satisfied with the after sales service. Thank you.

Gunaraj Vangadajalapathy
Port Dickson, Negeri Sembilan

★★★★★

Good customer service and fast response from service technician

---

chng alison
Bayan Lepas, Pulau Pinang

★★★★★

I am very impressed with prompt response when consulting about doubts on the function . It is a 6-star customer service

👍👍👍

intelClean Hood

MultiCooker

NANO Gas Stove

ALL-IN-1
FlexiSteam Pro Oven

SENZ Philosophy

The world changes at a rapid pace and SENZ embraces change. Performance, quality, and functionality – these are the attributes SENZ constantly improves for the better. The only thing that doesn't change is the vision of SENZ, which is to provide quality products to facilitate the modern lifestyle everyone desires.

From intelligent cleaning cooker hoods, powerful triple ring burner gas hobs, to energy saving MultiCookers – SENZ has got it all. Modernly designed and equipped with state-of-the-art technology, SENZ products will surely satisfy all your kitchen needs and cooking desires. Every SENZ product is quality assured and comes with professional, prompt after-sales service to better ensure you have the best SENZ experience.

SCAN ME

Customer Testimonial

SENZ Marketing (M) Sdn Bhd 880141-K

SENZ HQ Showroom & Warehouse
No. 23 Jalan TPP 3,Taman Perindustrian Putra,
Puchong, Selangor Darul Ihsan, Malaysia

General Enquires - WhatsApp:

- EN & BM Speaking Officer Assistance : 6019-9689226
- Chinese Speaking Officer Assistance : 6019-6729226

Follow us on:
@senz.malaysia

SENZ Authorized Dealer :

www.senz.com.my

E.G.O. SIRIM Suruhanjaya Tenaga Tri-Ringz Technology intelSync Technology FUTEX intelCleAn